ROPOX™
BETTER WAYS TO BETTER DAYS
- A PART OF AddLife

Sense - Toilet Support Arms

User manual

This folder should always be kept with the product

TF 200.0123_eng / Rev 07 / Date 19-10-2026

Content

1. Symbols used in this manual ... 3

2. Safety ... 3

2.1 Product labelling ... 5

3. General requirements ... 6

3.1 Product information ... 6

3.2 Product description ... 7

3.3 Intended use ... 7

3.4 Intended operator ... 7

3.5 Clinical functions ... 7

3.6 Product dimensions ... 7

4. Instructions for use ... 11

4.1 Mounting interfaces ... 11

4.2 Installation instructions ... 13

4.3 Operating the product ... 14

4.4 Use of toilet roll holder (optional extra) ... 14

... 15

4.5 Adjusting friction discs ... 15

4.6 Safe use ... 16

5. Cleaning ... 16

5.1 Pre-approved disinfectants ... 16

6. Maintenance ... 16

7. Component list ... 17

8. Environmental considerations ... 17

9. Accident/incident reporting ... 18

1. Symbols used in this manual

Warning Indication of a potentially dangerous situation. If not avoided, it can result in serious injury or death.	
Caution Indication of a potentially hazardous situation that may result in minor or moderate bodily injury. The symbol is also used to warn of improper use.	
Important This symbol draws attention to the correct use and handling of the product.	

2. Safety

	This manual must be read and understood before use. Always keep this manual close to the product. The use, installation and service of this product must be carried out in accordance with the manual to avoid dangerous situations that could lead to personal injury. Never use the product in any way other than as instructed in this manual. Any non-compliance may result in personal injury, dangerous situations and/or damage to the product. The person installing and using this product either as operator or patient must have access to the necessary safety information in this manual.

⚠	Do not carry out repairs, disassembly or assembly, own additions, adjustments or modifications to the product beyond what is described in this manual. These must be carried out by Ropox authorised personnel. Do not perform service when the product is being used by a patient. This appliance may be used by children aged 8 years and above and persons with reduced physical, sensory or mental capabilities or lack of experience and knowledge if they have been given supervision or instruction concerning safe use of the appliance and understand the hazards involved. Do not allow children to play with the appliance. Cleaning and user maintenance must not be carried out by children without supervision. Do not use the product if it is faulty or damaged until it is repaired or replaced.
!	The information in this manual is based on correct installation in accordance with the installation instructions for this product. Ropox cannot be held responsible if the product is used in a way that differs from that stated in this manual and/or installation instructions. Ropox reserves the right to change this manual and reference documents without prior notice.

2.1 Product labelling

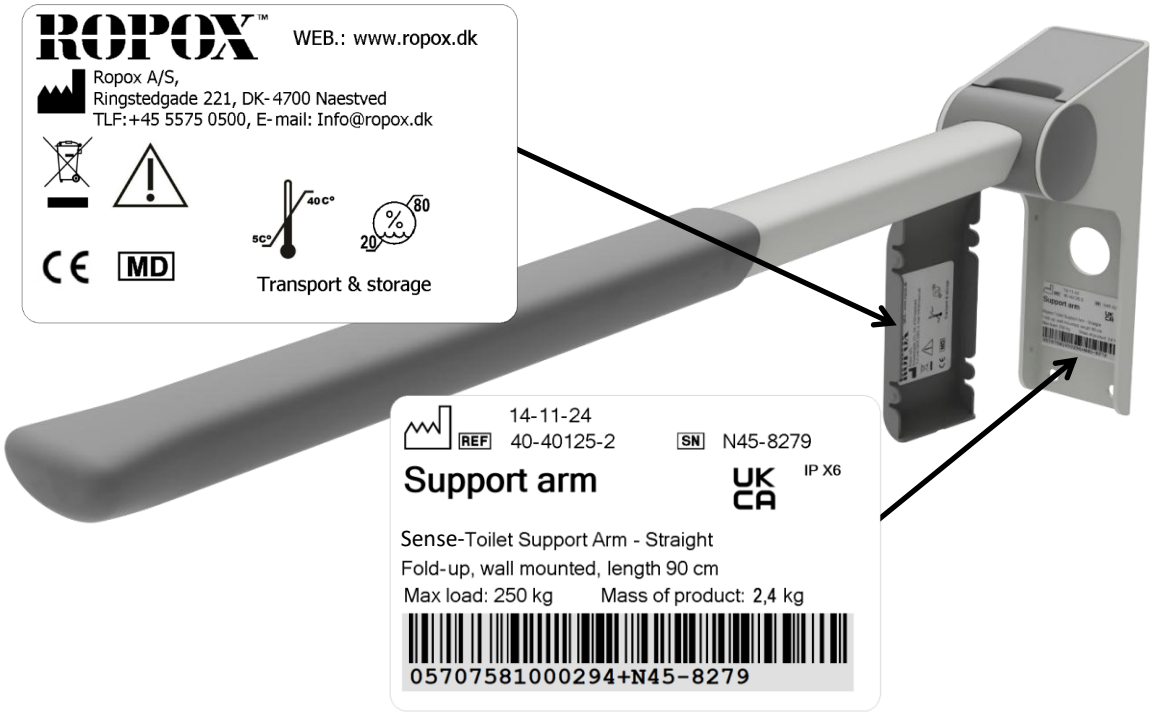

UK CA	This product is UKCA-marked in accordance with: UK SI 2002 No. 618 - *The Medical Devices Regulations 2002,* and its amendments
CE	This product is CE labelled in accordance with: European Medical Devices Regulation (EU)2017/745 Council Directive 2011/65/EU, RoHS
	Manufacturer's name and address
	Production date
REF	Item number
SN	Serial number
	Refer to the manual for important safety-related information, warnings and precautions
	Do not dispose of as unsorted municipal waste. The product must be returned to a suitable recycling centre
5°C 40°C	Operating and storage temperature must not exceed 5-40C°.
	Read the instruction manual before use

3. General requirements

3.1 Product information

Manufacturer	**Ropox A/S** Ringstedgade 221, DK-4700 Næstved +45 55 75 05 00 Email: Info@ropox.com				
Variants	**Item no.**	**Model**	**Length**	**Color**	**UDI**
	40-40402	Sense – Toilet Support Arm Straight	90cm	Grey	05707581014758
	40-40421	Sense – Toilet Support Arm Wave	90cm	Grey	05707581014772
	40-40430	Sense – Toilet Support Arm Straight w. support leg	90cm	Grey	05707581014789
	40-40431	Sense – Toilet Support Arm Wave w. support leg	90cm	Grey	05707581014796
	40-40401	Sense – Toilet Support Arm Straight	76cm	Grey	05707581014741
	40-40420	Sense – Toilet Support Arm Wave	76cm	Grey	05707581014765
	40-40432	Sense – Toilet Support Arm Straight w. support leg	76cm	Grey	05707581006562
	40-40433	Sense – Toilet Support Arm Wave w. support leg	76cm	Grey	05707581006579
	40-40400	Sense – Toilet Support Arm Straight	66cm	Grey	05707581014734
	40-40407	Sense – Toilet Support Arm Straight	90cm	Red	05707581004230
	40-40426	Sense – Toilet Support Arm Wave	90cm	Red	05707581004254
	40-40435	Sense – Toilet Support Arm Straight w. support leg	90cm	Red	05707581004261
	40-40436	Sense – Toilet Support Arm Wave w. support leg	90cm	Red	05707581004278
	40-40406	Sense – Toilet Support Arm Straight	76cm	Red	05707581004223
	40-40425	Sense – Toilet Support Arm Wave	76cm	Red	05707581004247
	40-40437	Sense – Toilet Support Arm Straight w. support leg	76cm	Red	05707581006623
	40-40438	Sense – Toilet Support Arm Wave w. support leg	76cm	Red	05707581006630
	40-40405	Sense – Toilet Support Arm Straight	66cm	Red	05707581004216
Max. user weight according to DS/EN ISO 17966:2016	250 kg Models with support legs: 330 kg				
Sideways pull-out force	150 kg				
Life expectancy	5 years				
MDR Class 2017/745	**Class I**				
Intended environment	This product should only be used in: Professional healthcare Private homes				
Temperature range	-5 °C to +40 °C Transport and storage +5 °C to +40 °C In use				
Materials in contact with patient	**Components**	**Material description**			
	Arm	Aluminium with paint			
	Misc. Plate covers	PA 6			
	Wall brackets	Stainless steel with paint			
	Rubber grip	TPU			

Accessories	
Item number	**Model/specifications**
40-40452	Toilet roll holder
40-40450	Height-adjustable unit with quick release
40-40451	Height adjustable unit without quick release

3.2 Product description

Sense - Toilet support Arm give the user stable support when getting up or sitting down, and for some, it's exactly the help they need to become self-reliant when using the toilet.

3.3 Intended use

For users who need support to sit down and get up from the toilet, Toilet Supports are a great disability-friendly aid. People with limited mobility can use Toilet Supports to support themselves when transiting from standing to sitting and vice versa.
They are also available in two different shapes and with different weight loads, making it possible to find the best possible alternative for the individual user or situation.

3.4 Intended operator

The intended operator can include anyone who has read and understood this manual. However, children are excluded.

3.5 Clinical functions

This product does not offer a clinically proven benefit to patients when used as intended by the manufacturer.

3.6 Product dimensions

40-40400 / 40-40405– Straight 66cm

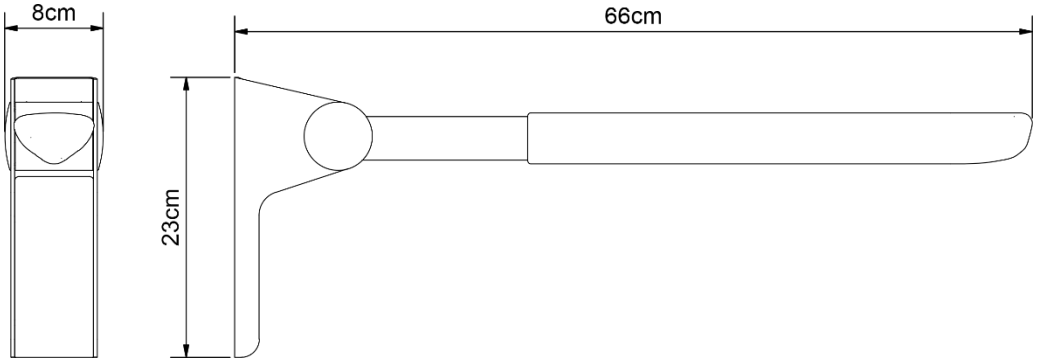

40-40401 / 40-40406 – Straight 76cm

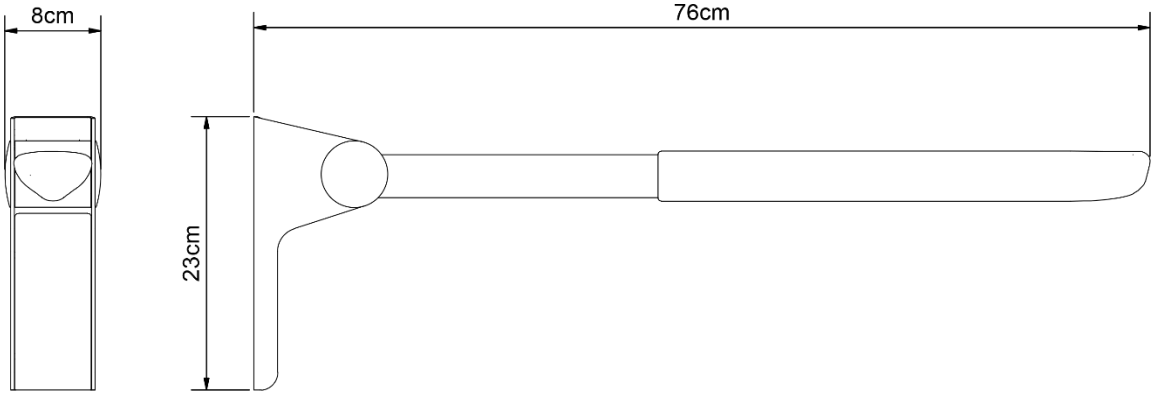

40-40402 / 40-40407 – Straight 90cm

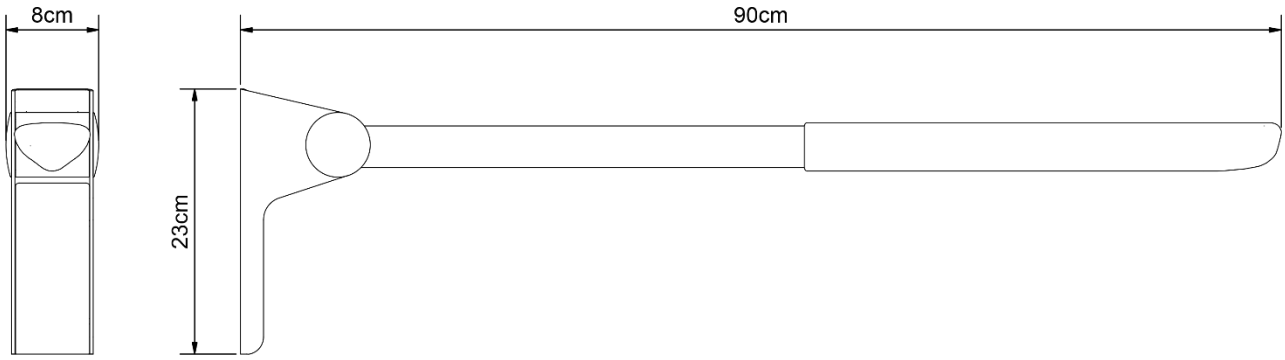

40-40420 / 40-40425 – Wave 76cm

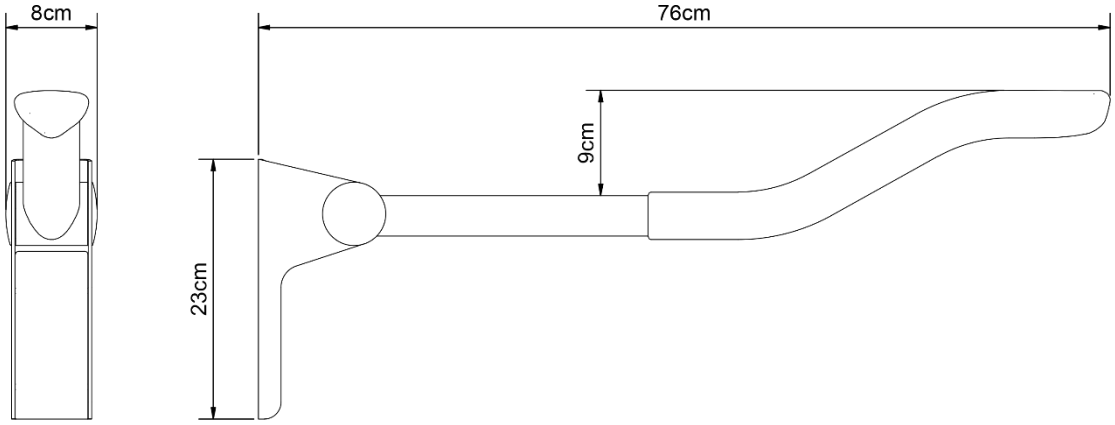

40-40421 / 40-40426 – Wave 90cm

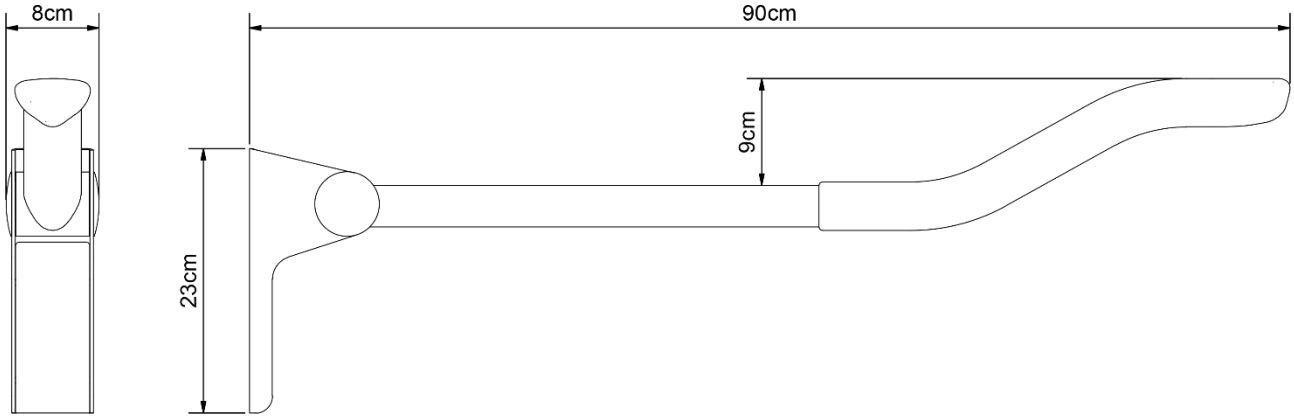

40-40430 / 40-40435 – Straight 90cm with support legs

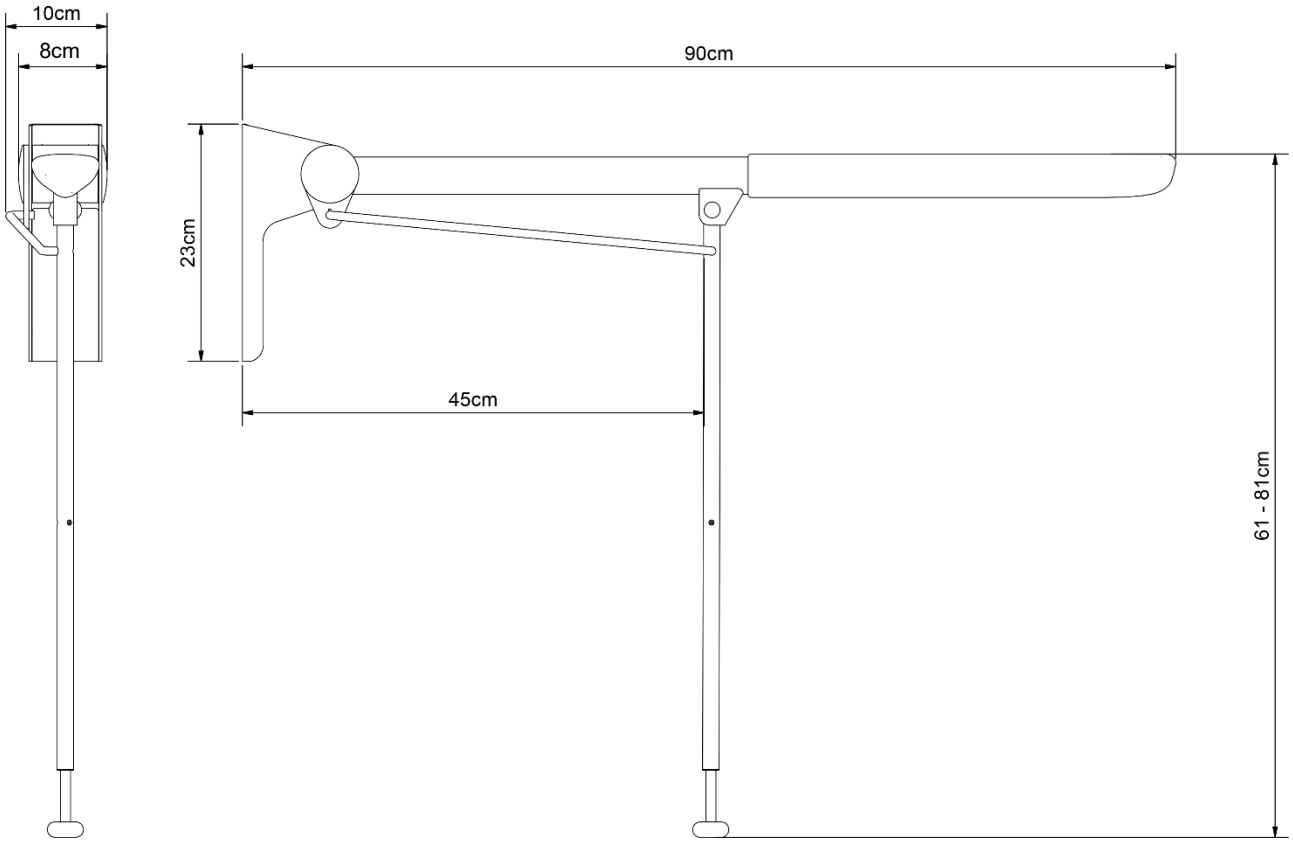

40-40431 / 40-40436 – Wave 90cm with support legs

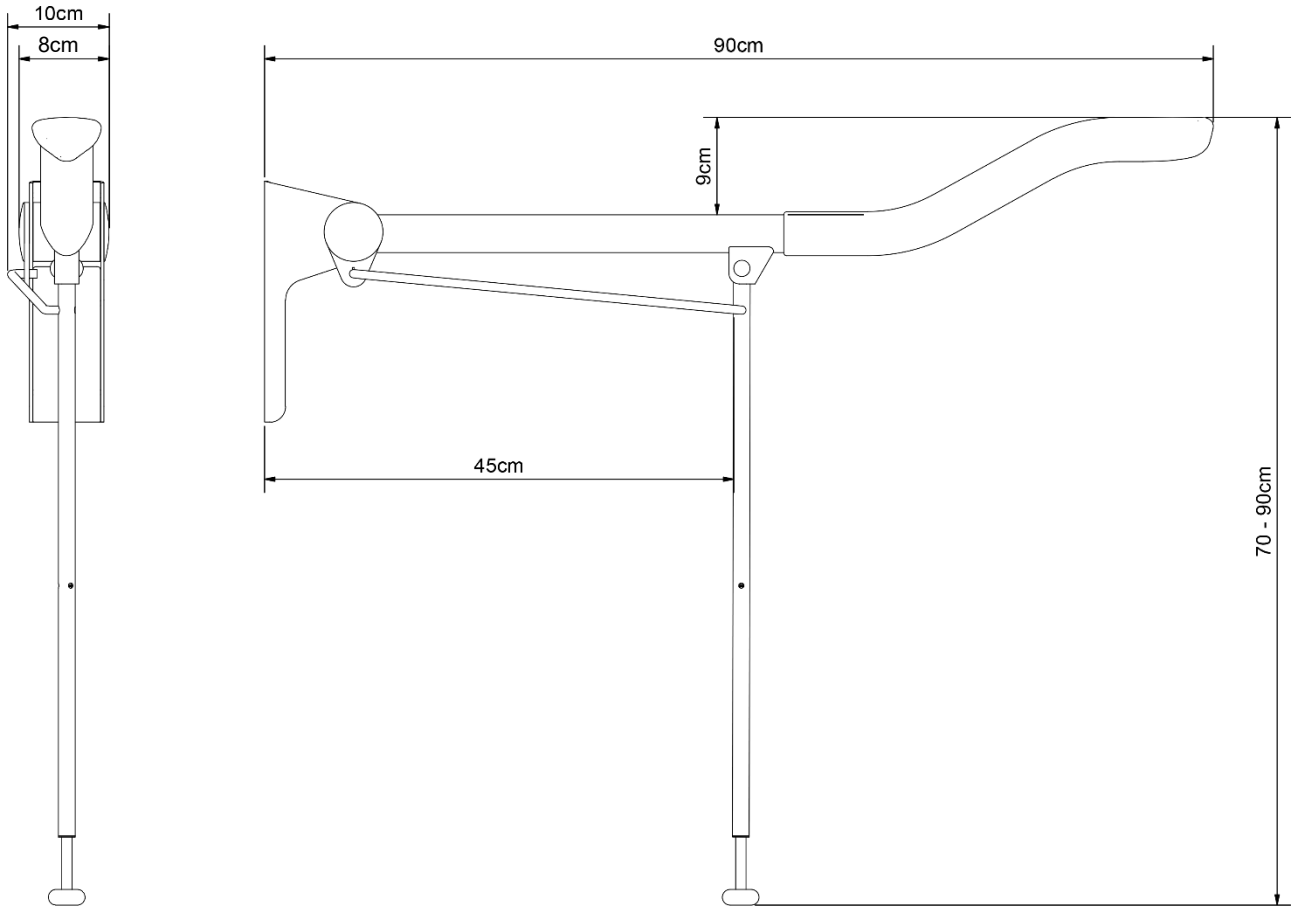

40-40432 / 40-40437 – Straight 76cm with support legs

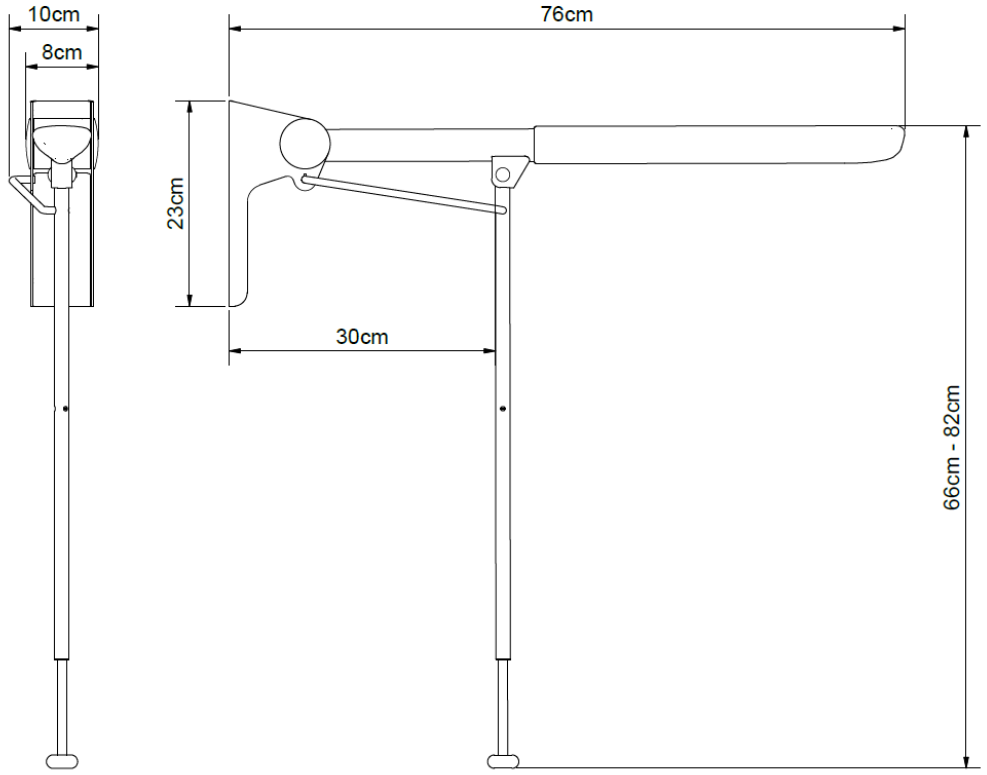

40-40433 / 40-40438 – Wave 76cm with support legs

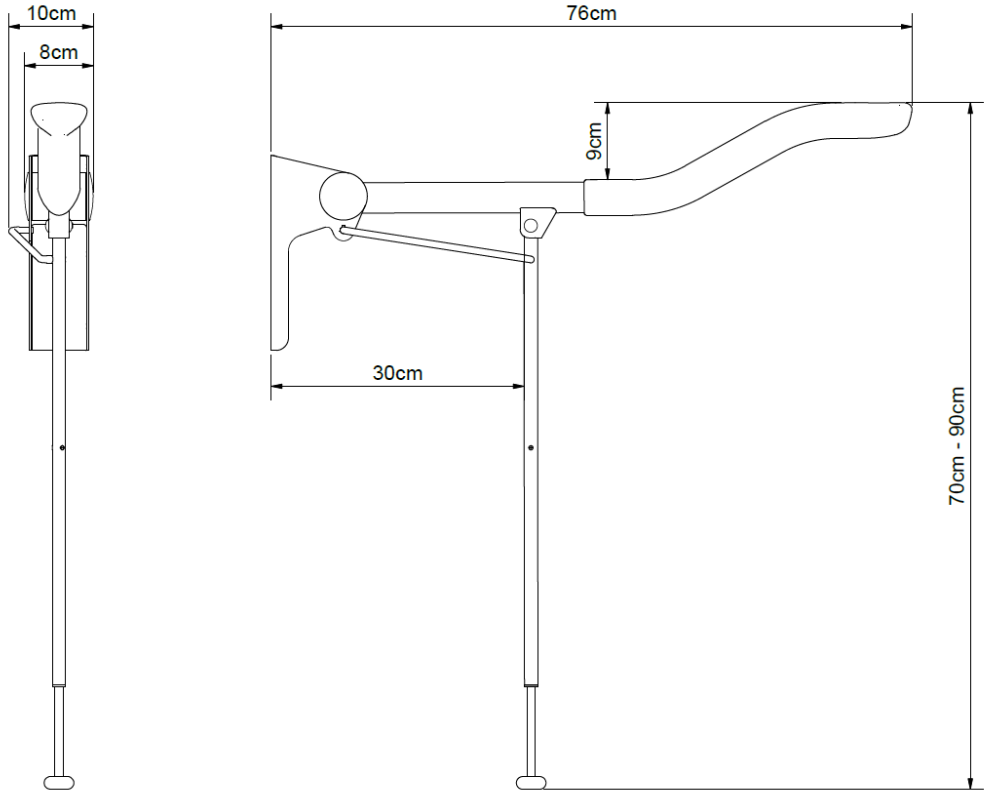

4. Instructions for use

4.1 Mounting interfaces

All models of Straight and Wave

Construction
The wall must be made of screw-retaining material approved for wet rooms.
The shaded area indicates the minimum area for wall reinforcement.
Reinforcement is best installed from floor to ceiling.

All toilet supports are load tested according to DS/ISO 17966, the maximum user weight is set to:

Max. user weight according to DS/ISO 17966
40-40400 / 40-40405: 250 kg
40-40401 / 40-40406: 250 kg
40-40402 / 40-40407: 250 kg
40-40420 / 40-40425: 250 kg
40-40421 / 40-40426: 250 kg
40-40430 / 40-40435: 330 kg
40-40431 / 40-40436: 330 kg
40-40432 / 40-40437: 330 kg
40-40433 / 40-40438: 330 kg

Max. torque top screws
40-40400 / 40-40405: 125 kg
40-40401 / 40-40406: 125 kg
40-40402 / 40-40407: 150 kg
40-40420 / 40-40425: 125 kg
40-40421 / 40-40426: 150 kg
40-40430 / 40-40435: 125 kg
40-40431 / 40-40436: 125 kg
40-40432 / 40-40437: 125 kg
40-40433 / 40-40438: 125 kg

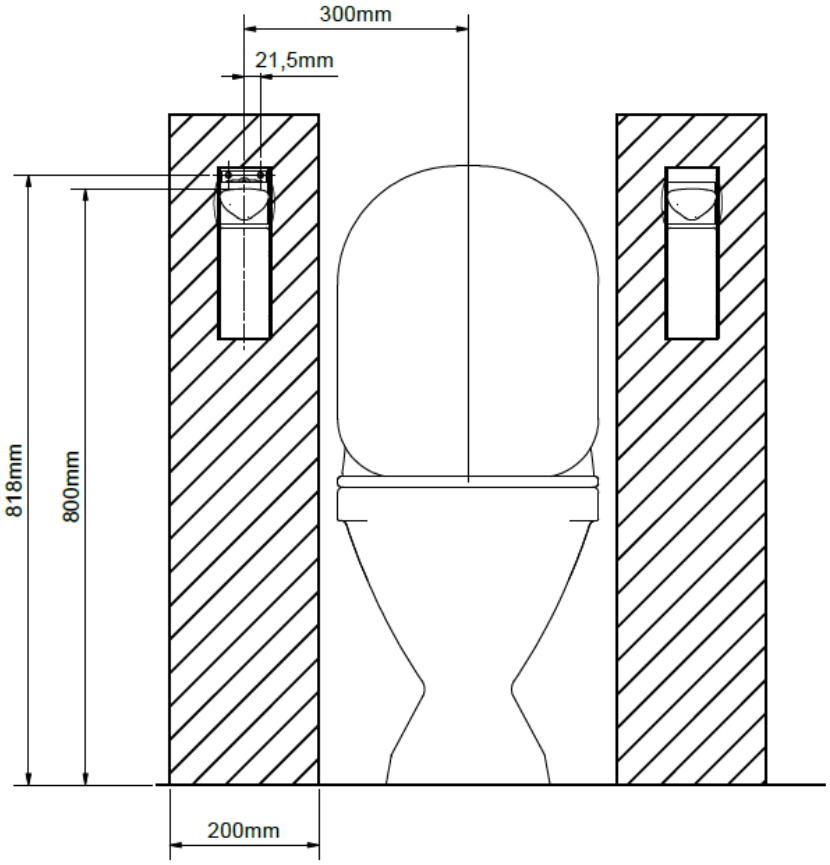

Please note
All measurements are based on a fixed height of the toilet support of 800 mm above floor level. If this measurement is to be changed, the recommended measurements must be changed accordingly.

The unit comes with a set (6 pcs) of screws and wall plugs that are intended for mounting on a concrete wall. The installer must always assess the material, nature and strength of the wall and use suitable screws and wall plugs for that particular type of wall.

A mounting template is enclosed for marking out the 6 mounting holes on the bracket.

User heights (top edge of toilet support) and installation heights (top holes in template/bracket).

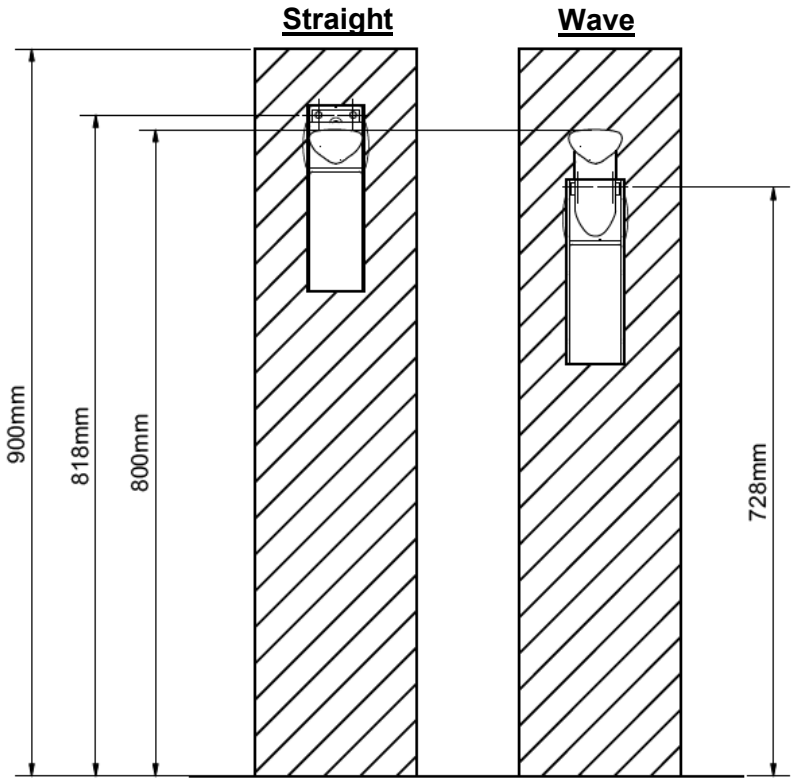

4.2 Installation instructions

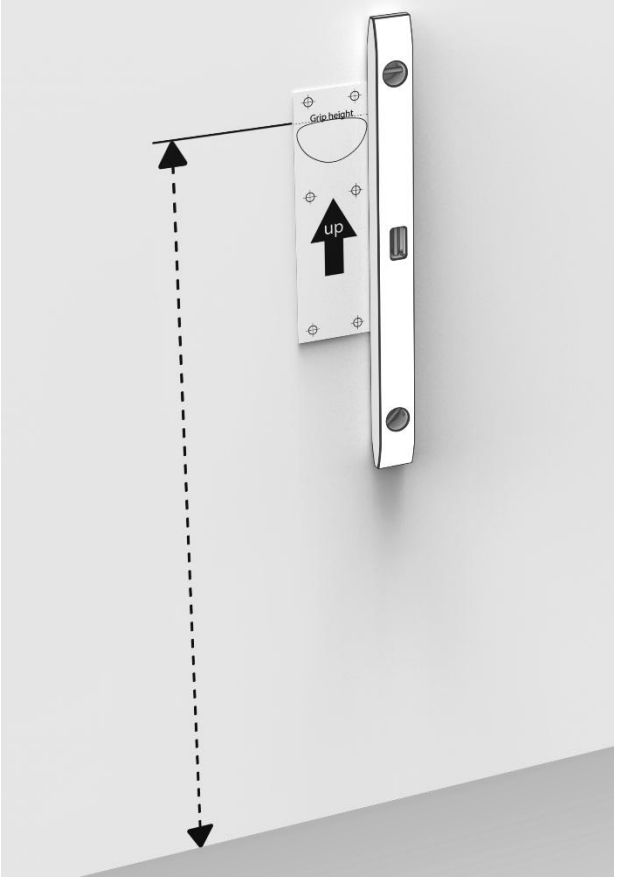

1. Use the included mounting template to mark the holes based on the desired height of the toilet seat. The dotted line on the template marks where the top of the handle will be.
2. Drill the holes and insert suitable wall plugs.

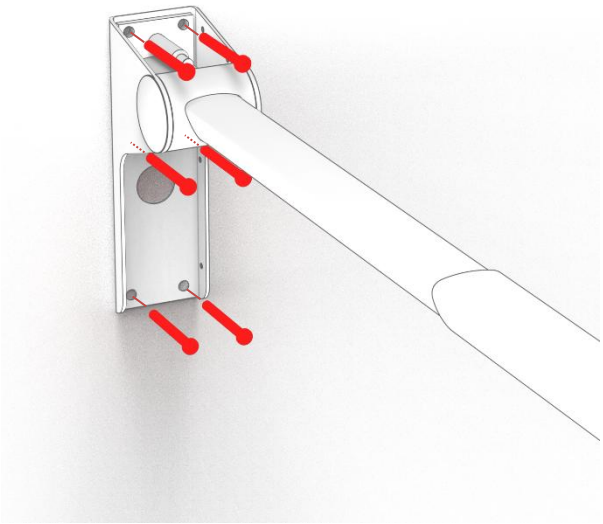

3. Screw the toilet support to the wall.
   Be careful not to hit the drum with the screwdriver when installing the top screws.

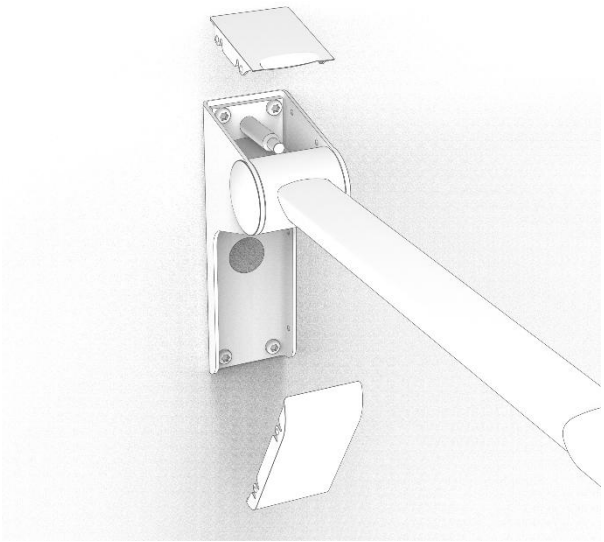

4. Install the upper and lower cover plate.

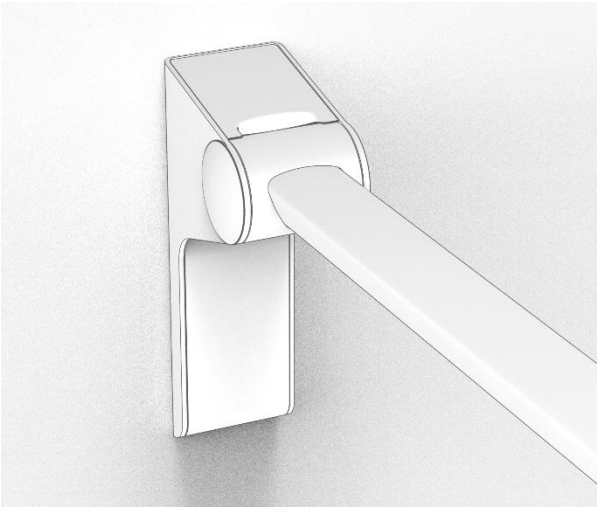

⚠	**Warning!** Before using the product for the first time, always load test it yourself. This is to ensure that the product is properly attached to the wall. If this is not done, the user risks serious bodily injury from a fall should the toilet support not be properly attached.

4.3 Operating the product

The toilet support can rotate 90° to vertical position.
The support is designed to be left in any position between 0° and 90° angle.

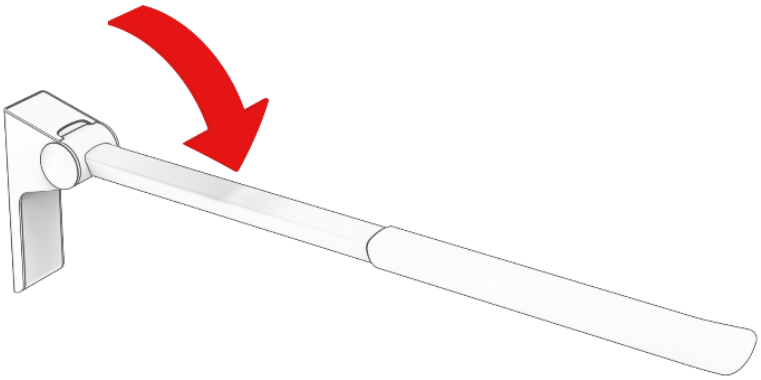

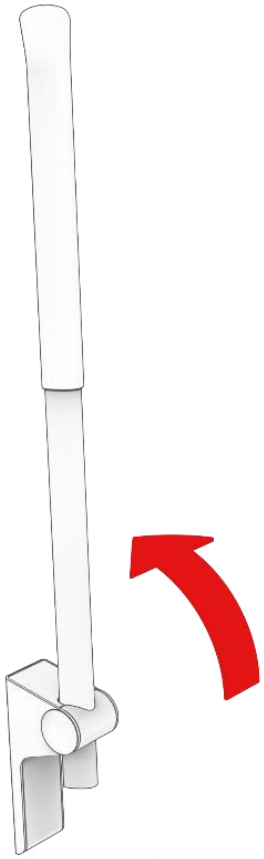

⚠	**Warning!** Always position the product so that it can move freely through its intended arc without hitting anything. Failure to comply may result in loss of product stability.

4.4 Use of toilet roll holder (optional extra)

<u>Installation of toilet roll holder</u>
The toilet roll holder can be optionally mounted on the rubber handle

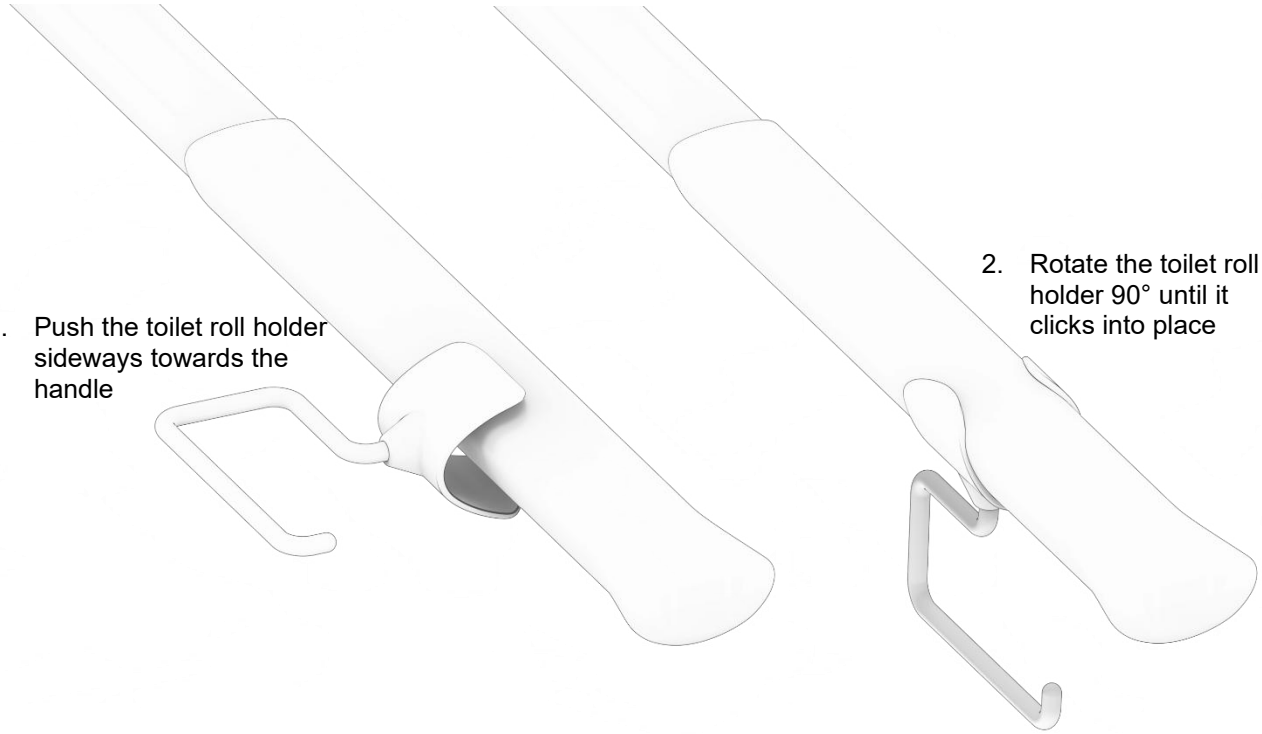

Orientation of the toilet roll

The toilet roll holder can be customised to hold the toilet roll in two different directions as desired

The toilet roll holder must be removed before orientation can be changed

1. Push the holder up through the plastic bracket

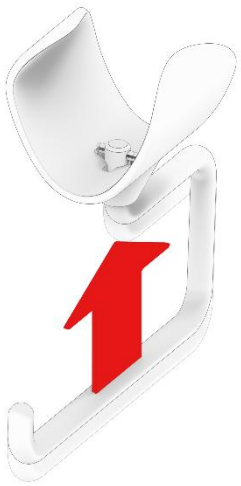

2. Once the cross-pin is free of the plastic, the holder can be rotated 90° and pulled back into the plastic bracket

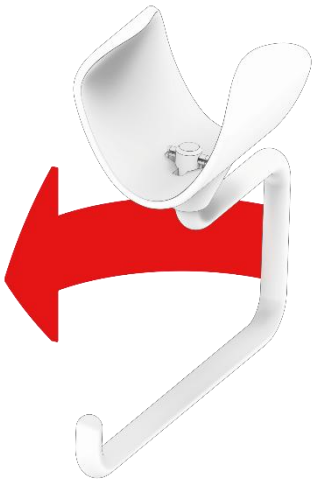

3. The toilet roll holder can now be reinstalled on the toilet seat

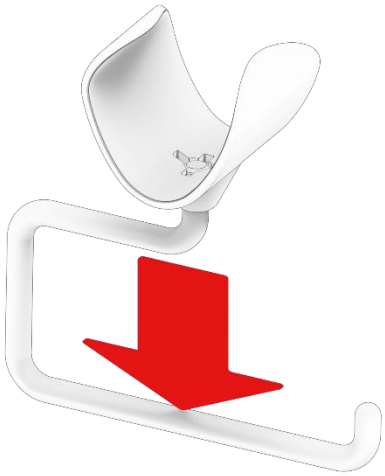

4.5 Adjusting friction discs

In some cases, the toilet support can no longer be left in a given position between 0° and 90°, but drops back down to 0°. In such cases, the friction discs need to be readjusted. Follow these 3 steps:

1) Remove the round side covers, e.g. with a small flat screwdriver
2) Use a Torx 20 screwdriver to tighten one or both screws. Test along the way if the toilet support stays where it is left. Be careful not to overtighten the screws as this can make the support unnecessarily difficult to adjust.
3) Click the two side covers back on by pressing the two snap-fit tabs into the corresponding holes.

4.6 Safe use

⚠	**Caution!** • Toilet support arms can become slippery when wet • Be careful not to pinch your fingers when folding the toilet support arm up/down • Carers or other personnel should avoid putting their feet under the support leg when folding it down

5. Cleaning

Clean using lukewarm water and a suitable all-purpose cleaner. Use a cloth or soft sponge to wash the product. Wipe the product with a wrung-out cloth.

For surface disinfection, chlorine-based disinfectants can be used as long as product specifications and safety precautions are followed, but the concentration must not exceed 1,000 ppm active chlorine. Ethanol-based disinfectants can also be used as long as product specifications and safety precautions are followed.

The following products have been tested by Ropox and can be used as long as they are diluted according to the product instructions.

5.1 Pre-approved disinfectants

Trade name	Solution
Diversey Suma Tab D4	1,000 ppm
Rodalon ®	Ethanol 70% v/v

Immediately after cleaning or disinfection, wipe the product with a cloth soaked in water and then a dry towel, otherwise the product may become discoloured or stained and the surface treatment may be damaged. Please note that the product can be expected to lose some shine or colour after prolonged use with normal cleaning intervals. The product can be disinfected independent of cleaning.

!	**Important!** Do not use cleaning agents that contain abrasive substances, e.g. scouring powder, steel wool, scouring pad. This product is not designed to be sterilised. Autoclaving and sterilisation beyond normal cleaning can alter product safety and function.

6. Maintenance

The toilet support is maintenance free. For safety reasons, we recommend regular inspection of all bolted connections and moving parts to ensure that no parts are loose and that fastenings to the wall are intact.

!	**Please note!** Failure to perform regular maintenance may result in degradation of the product's function and safety.

7. Component list

1 pce. Sense - Toilet support Arm, model varies 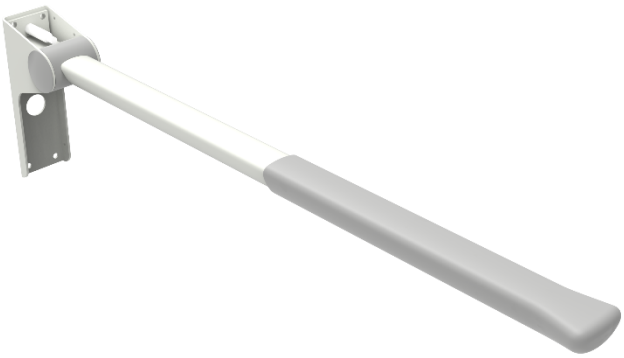	1 pce. Upper cover plate 1 lower cover plate 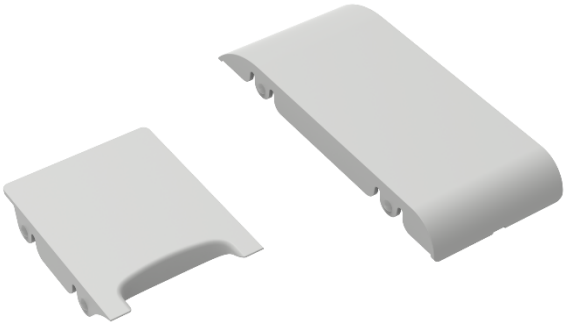
1 pce. Templates 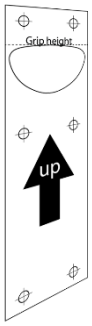	1 set Wall plugs and screws

	Please note! Ropox provides parts lists for extraordinary maintenance and repair beyond what is described in this manual. Repairs beyond what is described in this manual may only be carried out by Ropox authorised service personnel.

8. Environmental considerations

The product is not intended for disposal as municipal waste. Proper disassembly, sorting and disposal of components must be performed by waste management.

Component	Disposal recommendation
Cover plates	Residual waste
Toilet support	Metal
Rubber grip	Residual waste

9. Accident/incident reporting

The manufacturer of this product recommends that any accident/incident related to this product that fulfils all of the criteria below should be reported to the relevant authority and to the manufacturer.

1. An accident/incident has happened – or could have happened

2. The medical device is considered a contributing factor to the incident and

3. The accident resulted – or could have resulted – in one of the following consequences:

- *Death of a patient, user or third party*
- *A serious deterioration in the patient's, user's or third party's health condition, including in the form of:*
    - *1. Life-threatening disease*
    - *2. Permanent injury or disability*
    - *3. Necessary medical or surgical treatment to prevent life-threatening illness, permanent injury or disability*
    - *4. Foetal death, birth defects or congenital abnormalities.*

Ropox A/S
Ringstedgade 221
DK-4700 Næstved
Phone: +45 55 75 75 05 00
E-mail: info@ropox.dk
www.ropox.dk