ROPOX
Better ways to better days

Ropox Swing Washbasin and Dock-in

User Manual & Mounting Instructions

This manual should always be in close proximity of the product.

TF 200.01.0037_eng / Date 26-01-2022

Content:

1. SYMBOLS USED IN THIS MANUAL 3
2. GENERAL SAFETY 3
3. GENERAL REQUIREMENTS 6
4. INSTRUCTION FOR USE 11
5. SAFETY IN USE 25
6. CLEANING/MAINTENANCE 26
7. COMPONENTS PART LIST 27
8. ENVIRONMENTAL PROTECTION 27
9. ACCIDENT REPORTING 27

1. Symbols used in this manual

Warning Symbol Indication of potentially hazardous situation. If not avoided it can result in serious injury or death.	
Caution Symbol Indication of potentially hazardous situation which may result in minor or moderate injury. It may also be used to alert against unsafe practices.	
Notification Symbol This symbol is used to notify correct use and handling of the product.	

2. General safety

	This manual must be read and understood before use. Always keep this manual in close proximity of the product. The use, installation and service of this product must be in compliance with this manual to avoid accidents and serious personal injury. Never use or handle this product in other ways specified in this manual as it can result in personal safety hazards and/or cause damage to the product. Persons installing and/or using this product either as operator or user should have the necessary safety information and access to this manual. If the supply cord is damaged, it must be replaced by the manufacturer, its service agent or similarly qualified designated persons in order to avoid a hazard.

	Do not perform repairs, disassembly or assembly operations, add-ons, re-adjustments or modification of the product beyond what is described in this manual. These must be carried out by Ropox or Ropox authorized personnel. Do not perform service while in use. This appliance can be used by children aged from 8 years and above and persons with reduced physical, sensory or mental capabilities or lack of experience and knowledge if they have been given supervision or instruction concerning use of the appliance in a safe way and understand the hazards involved. Children shall not play with the appliance. Cleaning and user maintenance shall not be made by children without supervision. Do not use the product if it has defects or have become damaged before being repaired or replaced. If the control box makes unusual noise or smells, switch off the mains voltage immediately. Take care that the cables are not damaged. Unplug the mains cable on mobile equipment before it is moved. The products must only be used in an environment that corresponds to their IP protection.
	The information in this manual is based on correct installation in accordance with installation instructions for this product. Ropox cannot be held liable if the product is used in any way that differs from stated in this manual and/or installation instruction. Ropox reserve the right to amend this manual and reference documents without prior notice.

2.1 Product Unit label

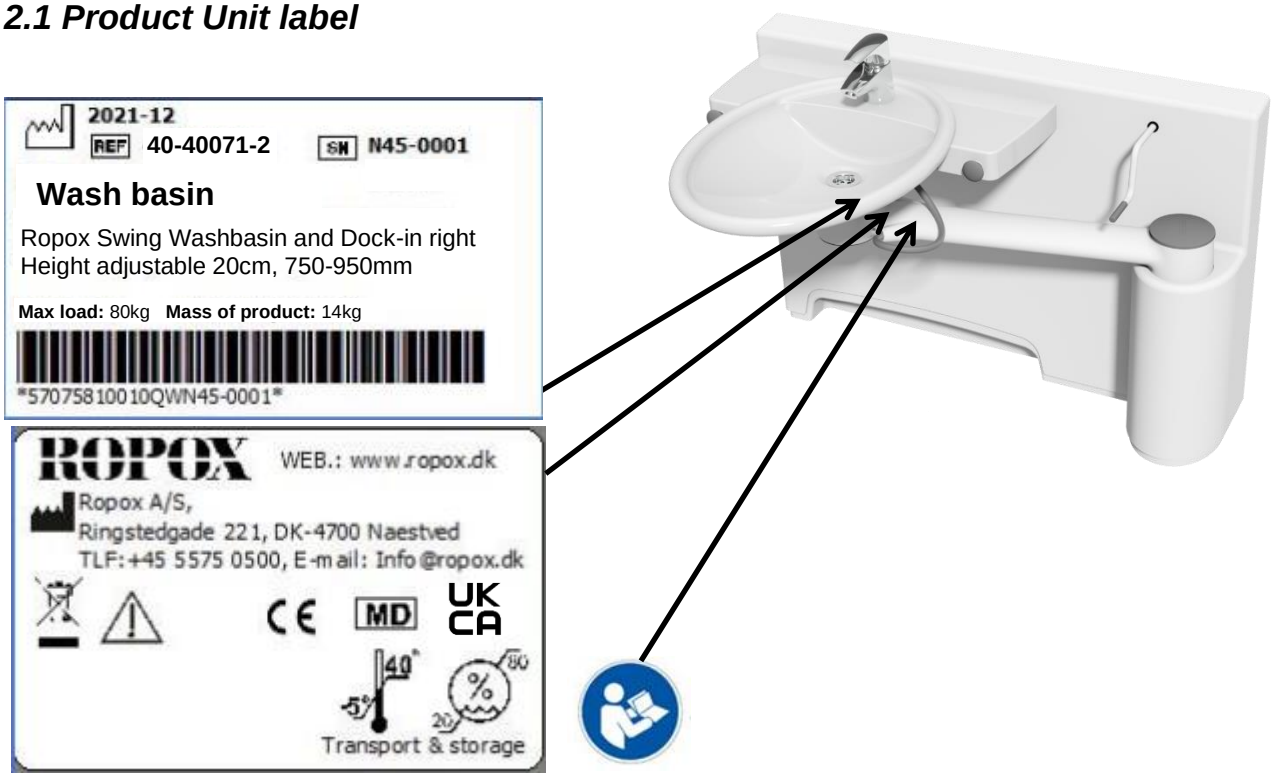

CE	This product is CE-marked in accordance with: European Medical Device Regulation (EU)2017/745 Council Directive 2006/42/EC on machinery Council Directive 2011/65/EU, RoHS
	Manufacturer name and address
	Date of production
REF	Stock number
SN	Serial number
	Consult manual for important safety related information, warnings and safety precautions.
	Do not dispose as unsorted municipal waste. Product must be returned to a designated recycling station.
40°C 5°C	Operating and storing temperatures may not exceed 5-40C°
	Consult the instructions for use

3. General requirements

3.1 Product information

Manufacturer:	Ropox A/S Ringstedgade 221, DK-4700 Naestved +45 55 75 05 00 Email: Info@ropox.com		
Product models	Part number	Model	Configuration
	40-40071 40-40072	Ropox Swing washbasin Ropox Swing washbasin	Complete Right Complete Left
Basic UDI	57075810001QV		
Expected service life	5 years		
MDR Class 2017/745	**Class I**		
Intended environments	This product is to be used only in: Proffesional Healtcare Environment Homecare Environment		
Maximum user weight according to ISO 17966	245kg / 539lbs when the wash basin is locked in dock-in 80kg / 176lbs when Washbasin is free standing		
Height adjustment	15 cm		
Ambient temperature	-10 °C to +50 °C Transport and storage +5 °C to +40 °C Operation		
Relative humidity	20% to 80% - non-condensing		
Materials in contact with patient	Wash basin Unit Cover	Molded marble Sand cast aluminum Stainless steel tube Various plastic components ABS	

3.2 Product description

Ropox QuickWash is a small height adjustable system for a washbasin. It can be height adjusted 14 cm, while also projecting the attached washbasin 20cm out from the wall for added legroom.

3.3 Intended use

The Swing Washbasin is a washbasin which can be swung to the user, which makes it possible for the user to wash hands before leaving the toilet. This increases the hygiene, makes the user more self-reliant and gives the assistant better working conditions. The Swing washbasin is available with manual height adjustment. Depending on the model, the height adjustment range is 15 cm for models without dock-in and 20 cm for models with dock-in. This means that the user and carer can set the level of the sink to the height that fits the user's needs. The height adjustment also makes the sink suited for both standing and seated use. It can be lowered for seated users, e.g., wheelchair users or elderly users who prefer to sit while washing hands or brushing teeth, and it can be raised for standing users or carers.

3.4 Intended operator

The intended operator may include all that have read and understood this manual exempt kids.

3.5 Essential performance

The device does not have any function related to basic safety or essential performance. In case of loss or degradation of performance, the user can still wash their hands or chose not to.

3.6 Non-clinical functions

Height adjusting offers better ergonomics to the user.

3.7 Clinical functions

This product does not offer clinical benefit for patients, when used as intended by the manufacturer.

3.8 Product dimensions

40-40071 Left

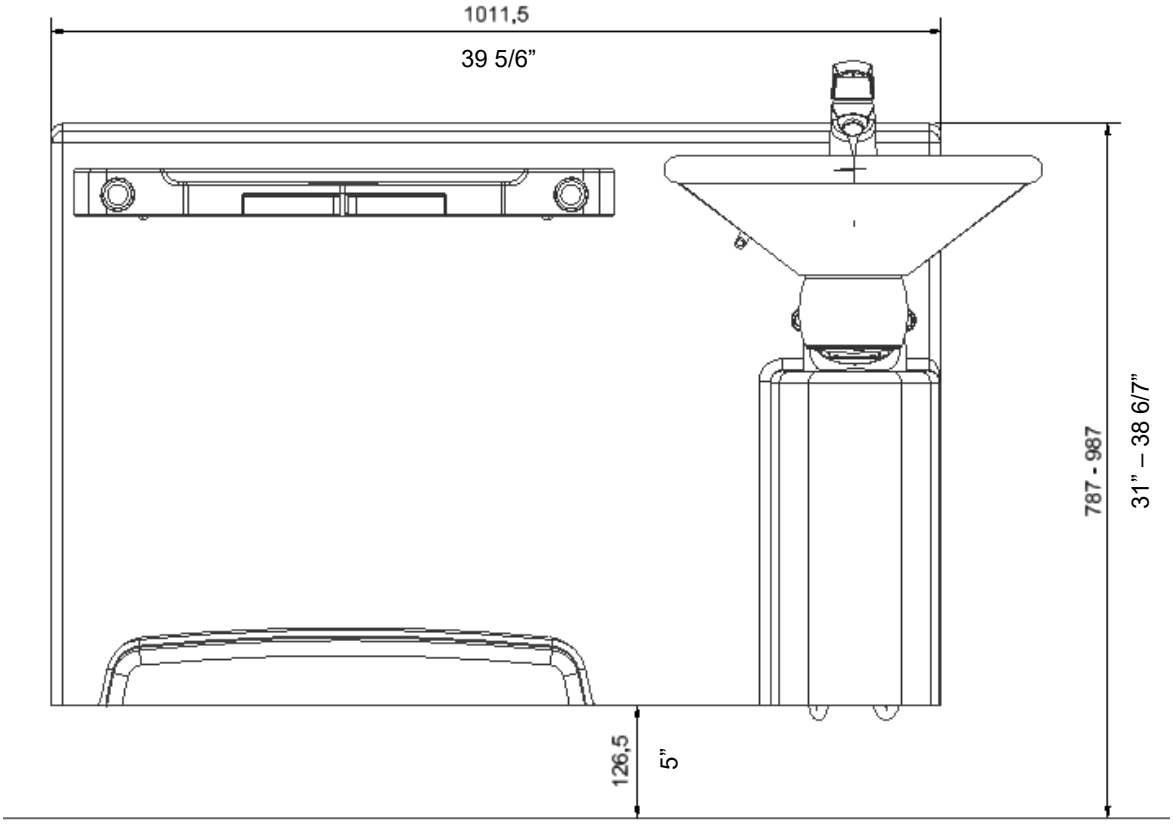

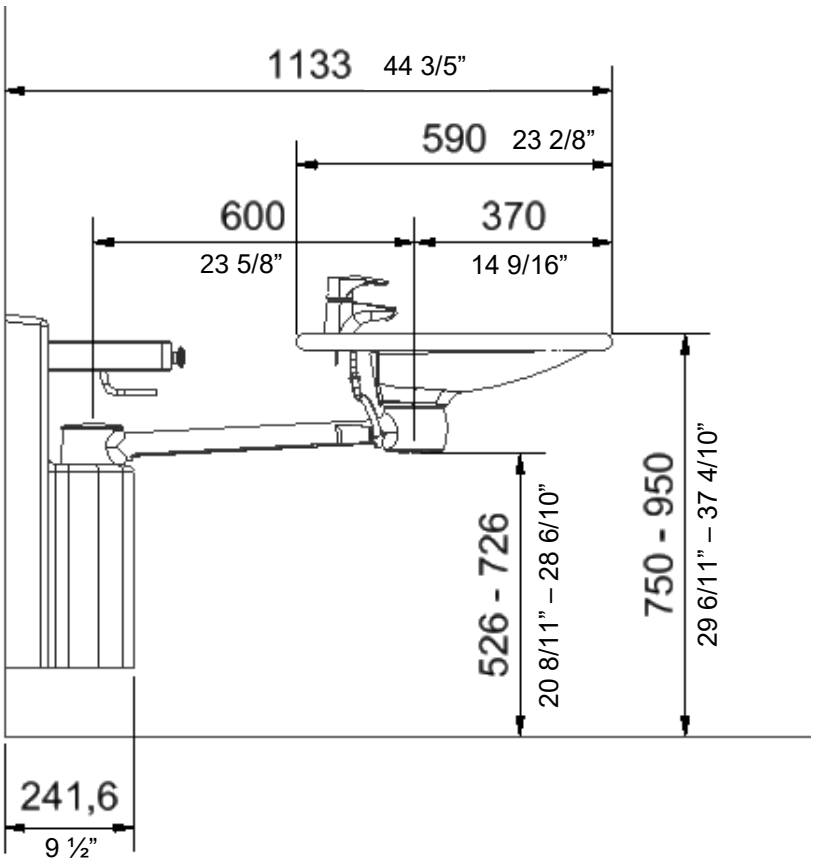

NB: All dimensions are in mm and inches

3.9 Connection adapters

The highlighted components can be bought separately depending on the type of building installation requirements

Water supply

Swing Washbasin	Hose from basin	Adapters	Installation in room (not included)
	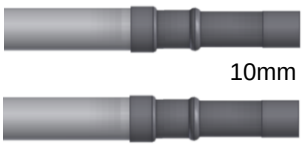 10mm	**10mm -> 1/2"** Item no. 97001667	**1/2"** Thread
		10mm -> 3/8" Item no. 97001668	**3/8"** Thread
		10mm -> 15mm Item no. 97001665	**15mm** Pipe

Water hose extensions

Hose from basin	Coupling piece	Extra hose
10mm	**10mm -> 1/2"** Item no. 97001101	**1/2" x 1/2", 0,5m, steel** Item no. 97001123
		1/2" x 1/2", 1m, plastic Item no. 97001120

Drain

Swing Washbasin	Drain pipe from basin	Adapters	Installation in room (not included)
	Ø32	No adapter necessary	ø32
		Ø32 -> Ø40 Item no. 97001660	Ø40
		Ø32 -> Ø50 Item no. 97001661	Ø50

Drain pipe extensions

Drain pipe from basin	Coupling piece	Extra drain pipe
Ø32	**Ø32-Ø32** Item no. 97001062	**Ø32 Flex hode, 27-62cm** Item no. 97001162
		Ø32 Flex hose, 40-110cm Item no. 97001161

3.10 Layout proposals

For complete layout proposals & inspiration contact Ropox for further guidance.

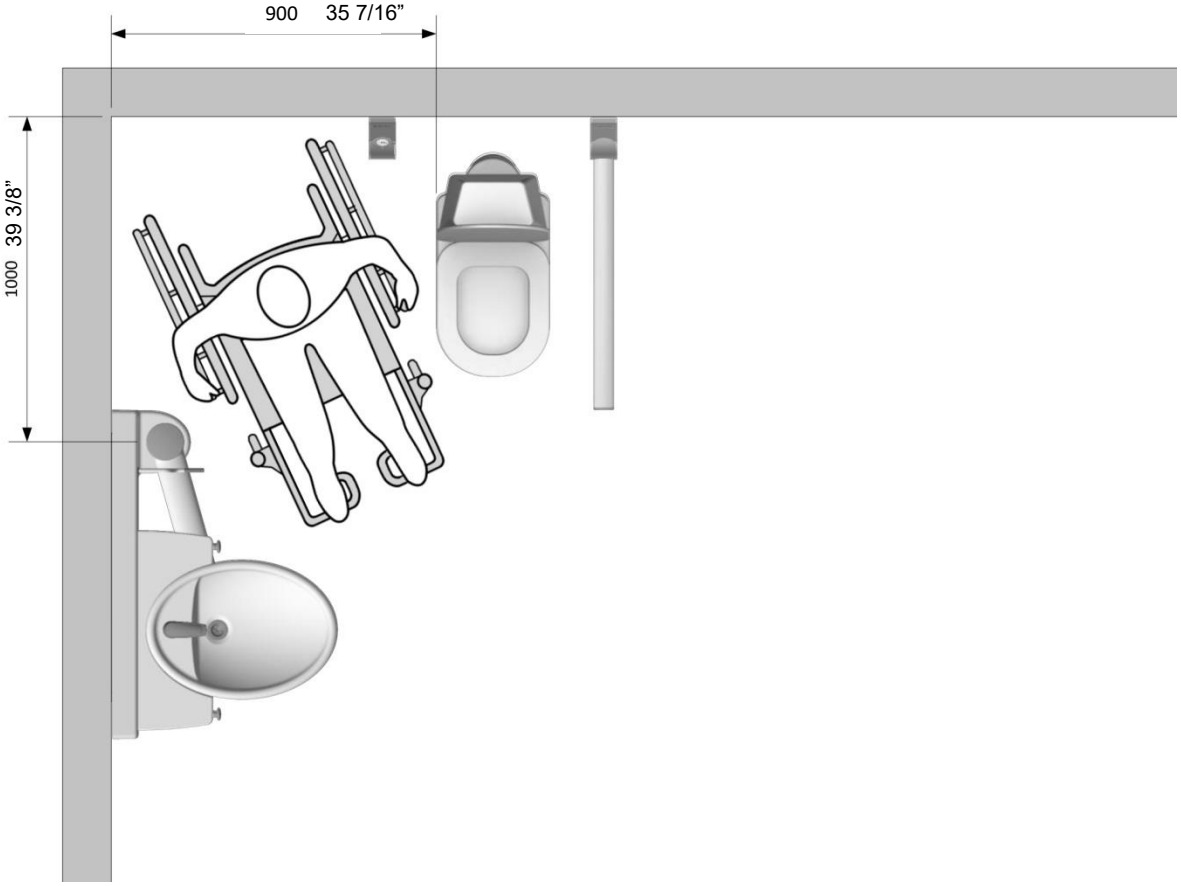

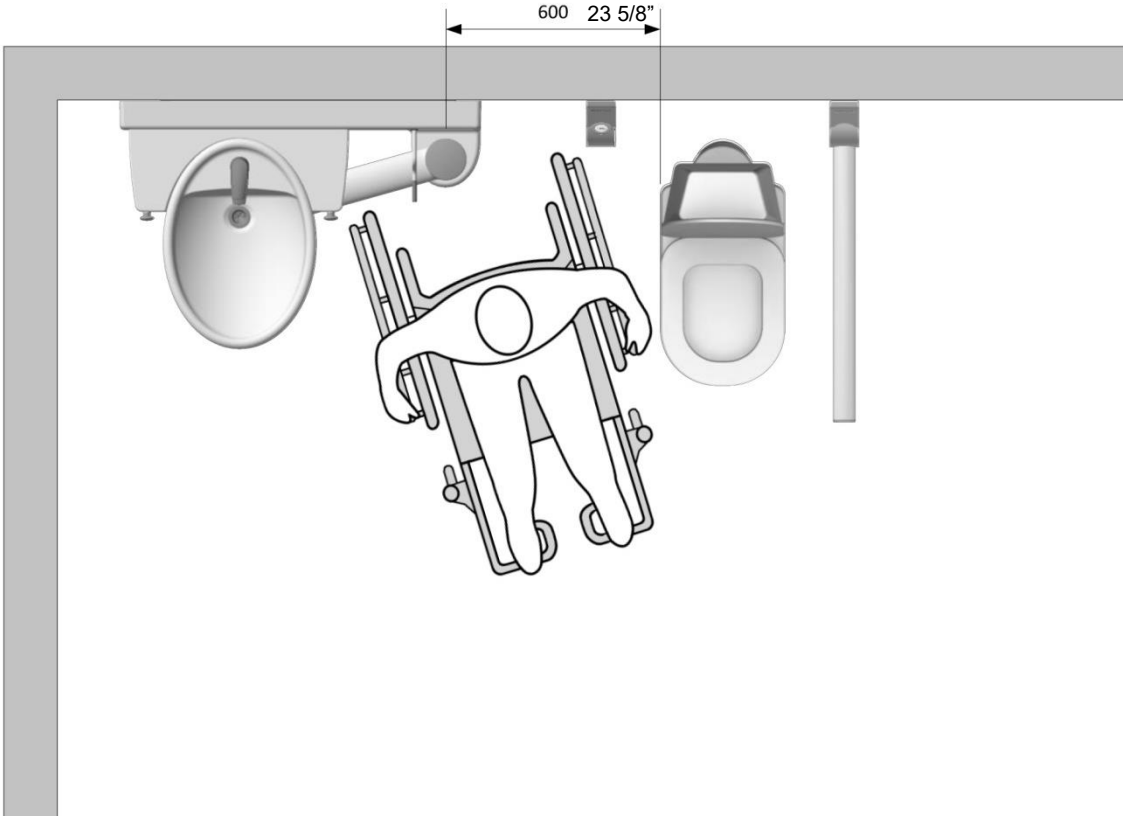

4. Instruction for use

4.1 Operating the product

Ropox Swing Washbasin has a turning function, which means that it is **NOT** allowed to be used as a walking or standing support.

If the washbasin is locked in the Dock-in it functions as a standard washbasin and is safe to use as a standing support.

Maximum loads

Locked in Dock-in (sold separately)
A 245kg/539lbs person is able to lean on the basin while standing, without causing any significant deformation or safety risk.

Washbasin free standing
A 80kg/176lbs person is able to lean on the basin while standing without causing any significant deformation or safety risk.

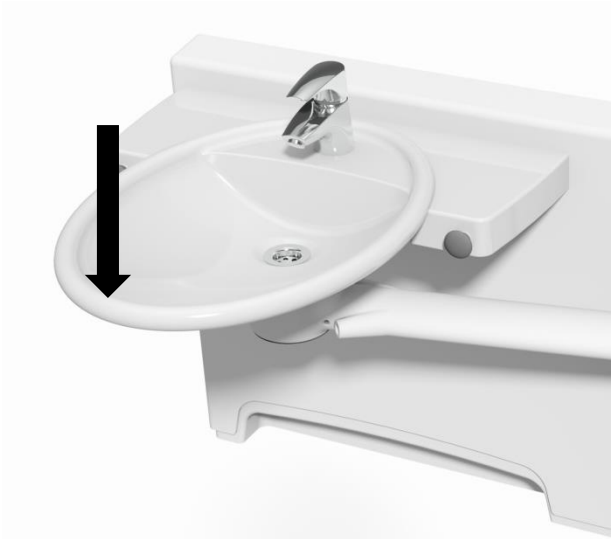

	Warning! Make sure that the wash basin is locked correctly in dock-in, when using it as a standing support.

	Caution! Do not sit or fully displace your body weight on the sink or on the swing arm.

4.2 Adjusting the height

For height adjustment turn handle.

⚠	**Warning!** The product should always be able to travel the full range of actuation without colliding with objects. Failing to do so will compromise the product stability.

4.3 Lock Washbasin into Dock-in

The Dock-in station is designed to ensure easy locking of the washbasin during daily use.

The washbasin is guided into the notch and will be locked automatically in the right position. To release the washbasin pull one of the two handles. This will release the washbasin from the locking mechanism after which it may swing freely.

	Warning! Make sure that no items should be placed between the wash basin and the dock, when docking in

4.4 Permanent lock

The washbasin can be permanently locked and thereby function as a standard washbasin. This is done by inserting the two supplied M5 screws as shown below. Please note that the washbasin needs to be locked in the Dock-in when the screws are tightened and both screws must be used.

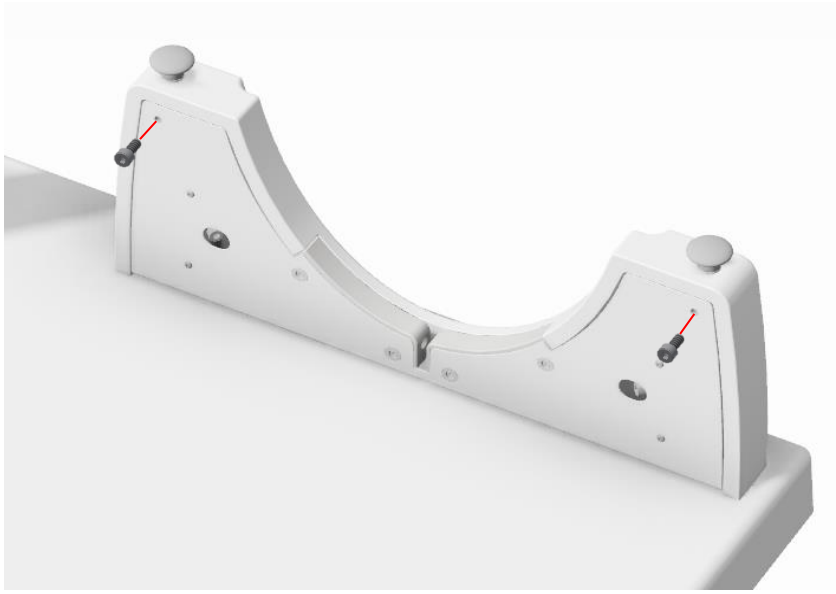

4.5 Deactivation of the lock

It is also possible to use the screws to deactivate the locking system if desired. This is done by inserting and tightening one of the screws while pulling out the handle. This only has to be done in one of the side to work.

4.6 Installation of product

The screws and rawlplugs included are for mounting on a concrete wall. The installer must always examine the material, condition and strength of the wall and use appropriate screws and rawlplugs. Maximum load of top screws are 120kg/264lbs.

	Warning! The fitter should always consider the material, condition and strength of the wall and use screws and rawlplugs suitable for the specific wall type.

4.6.1 Components

Lifting unit	1 pc.	
Inside cover plate	1 pc.	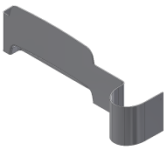
Outer cover plate	1 pc.	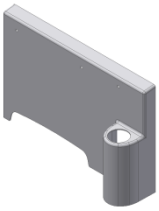
Fitting for fixation of Inside cover plate	2 pcs.	
Washbasin	1 pc.	
Dock-in	1 pc.	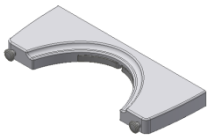
Fitting for fixation of Dock-in	2 pcs.	
U-profile with nut	2 pcs.	

Handle	1 pc.	
Screws countersunk M6x16	8 pcs.	
Screws 4x6	2 pcs.	
Frame screws 7,5x72mm	10 pcs.	
Rawlplugs 10x61mm	10 pcs.	

4.7 Mounting

For recommended height of washbasin from 750-950mm above floor level see below mentioned dimensions.

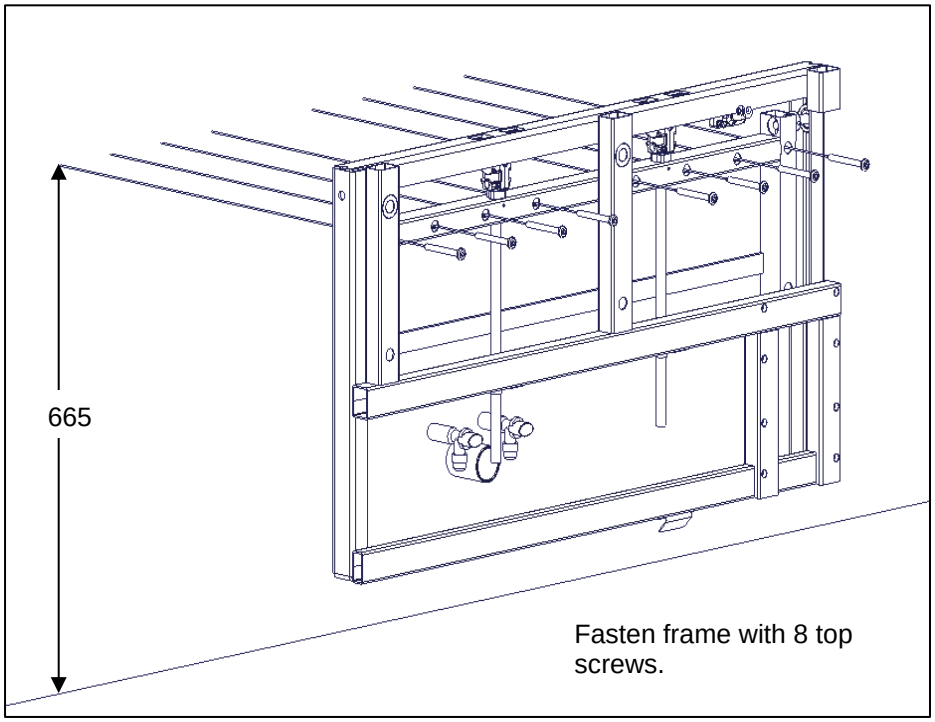
665
Fasten frame with 8 top screws.

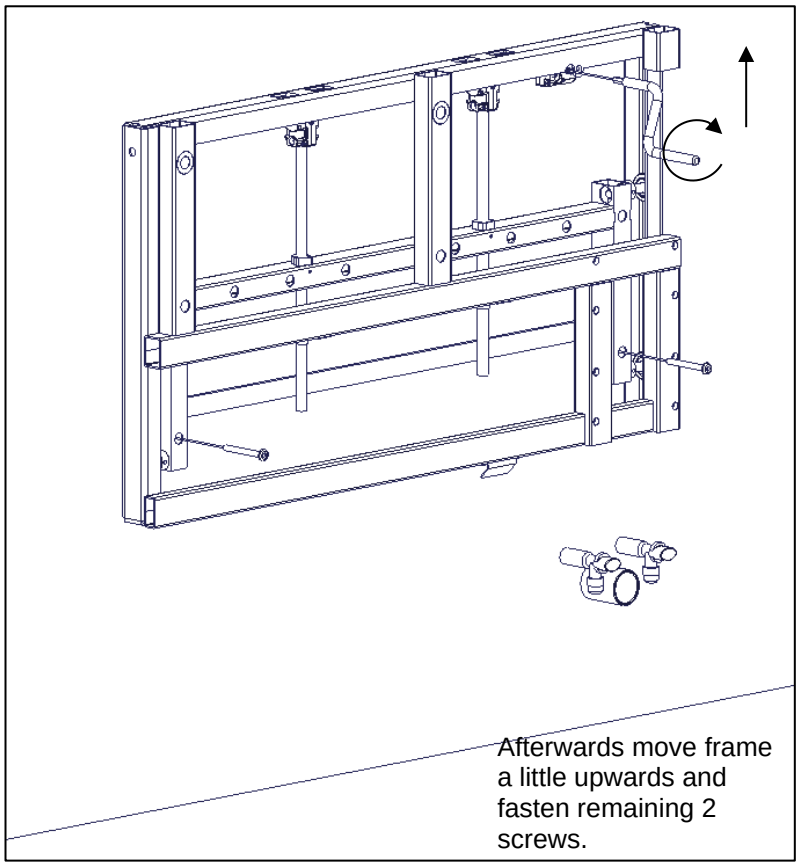
Afterwards move frame a little upwards and fasten remaining 2 screws.

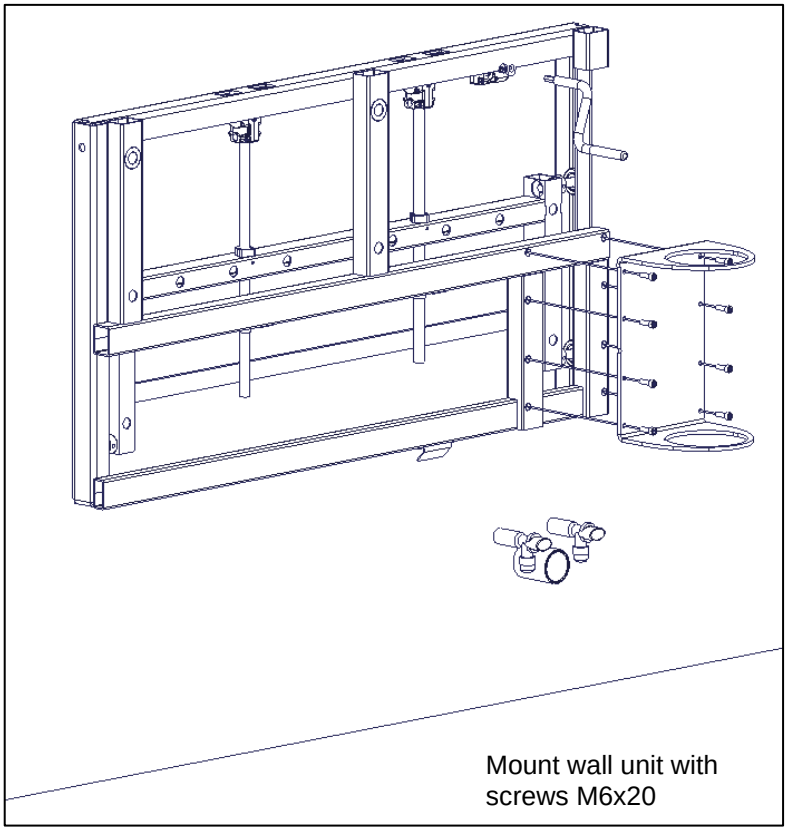

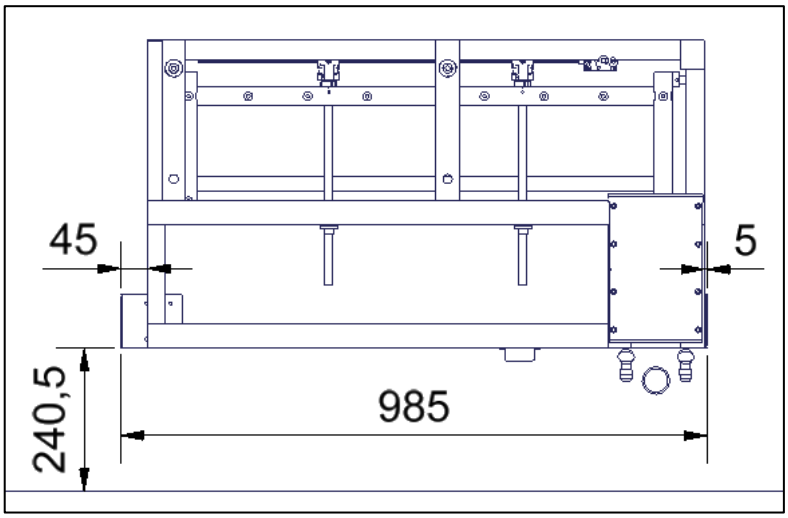

Mount fitting for fixation of inside cover as illustrated.
If washbasin is placed in opposite side fittings & dimension have to be swapped.

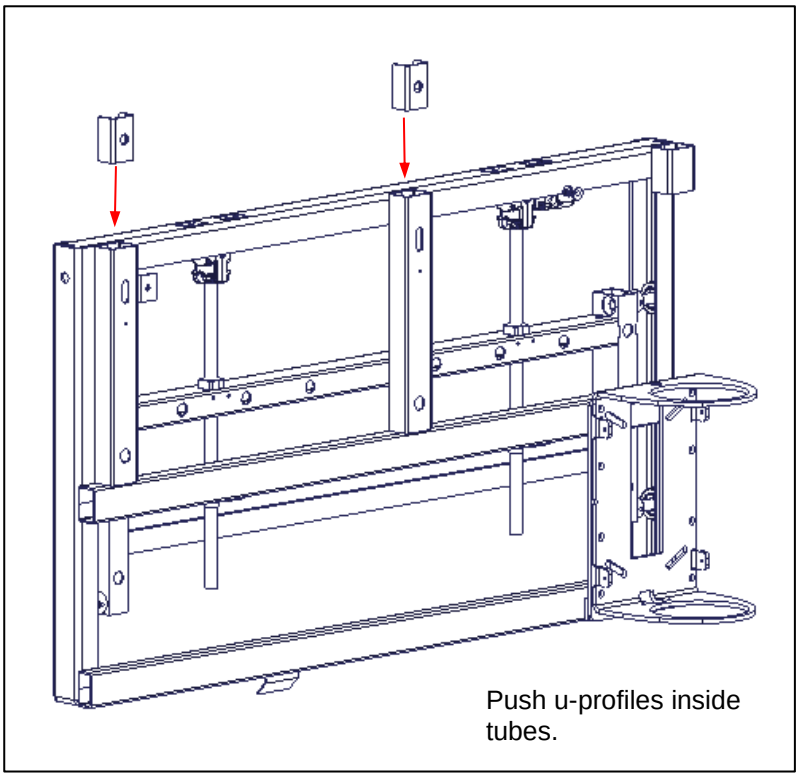
Push u-profiles inside tubes.

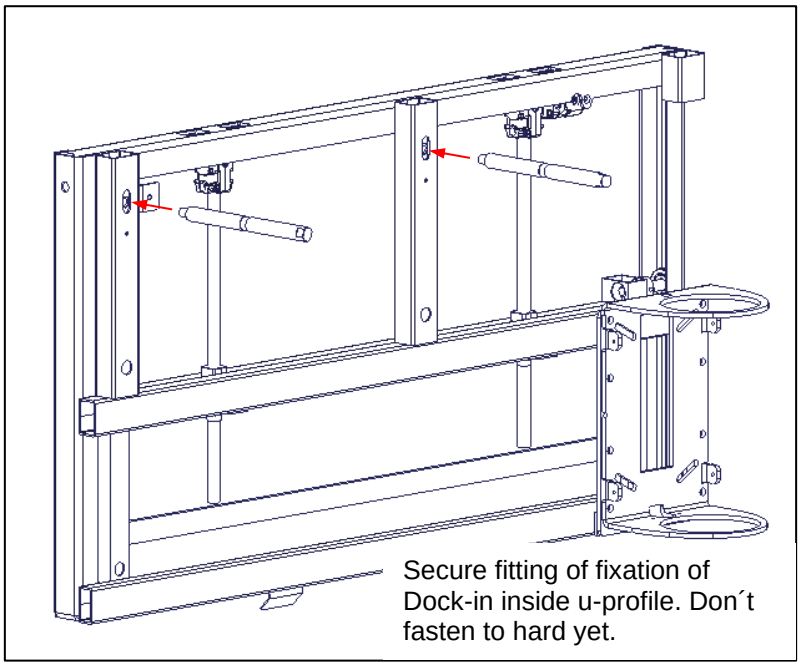
Secure fitting of fixation of Dock-in inside u-profile. Don´t fasten to hard yet.

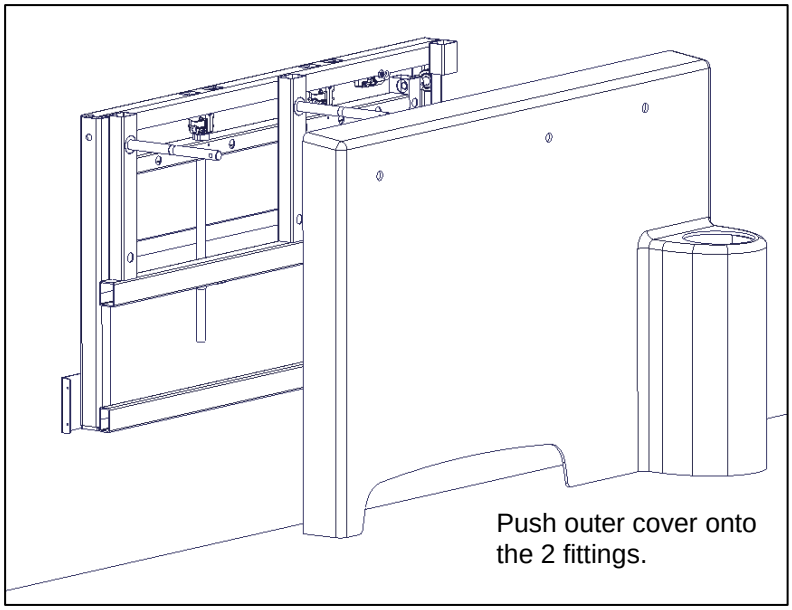
Push outer cover onto
the 2 fittings.

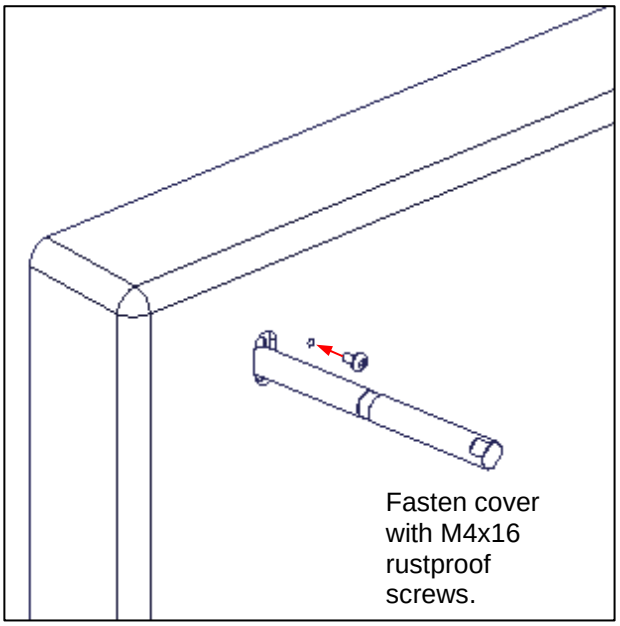
Fasten cover
with M4x16
rustproof
screws.

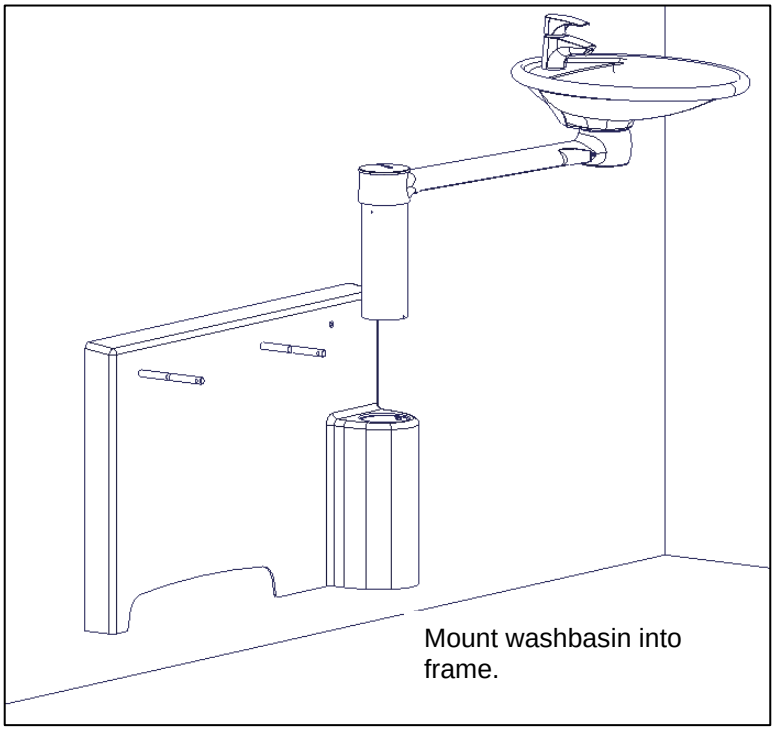

Mount washbasin into frame.

Move washbasin into top position. Mount 2 M5x6 screws under the cover each side. This is to avoid washbasin being pulled out.
NOTE! It is important that slide valves are mounted from beneath.

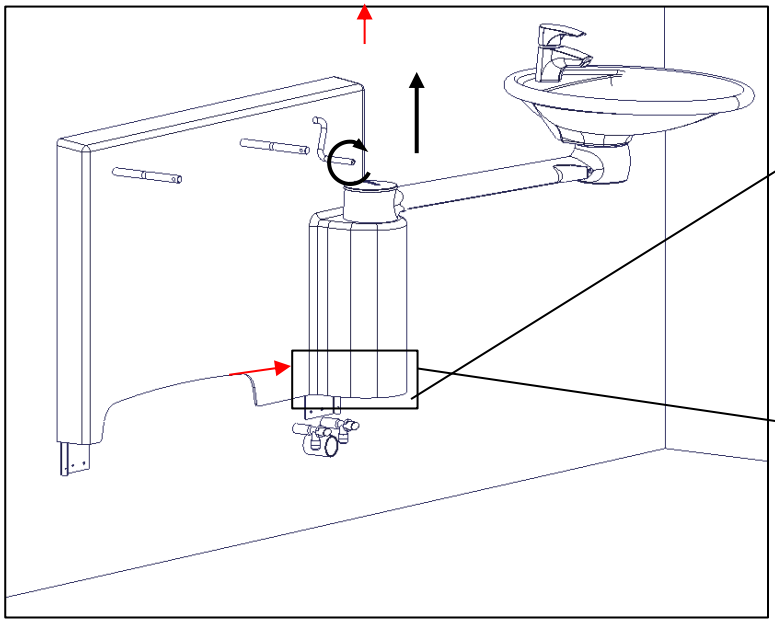

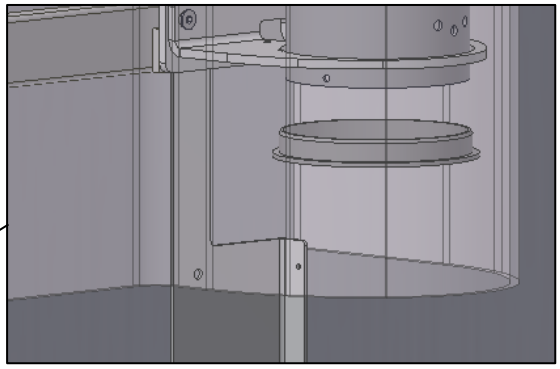

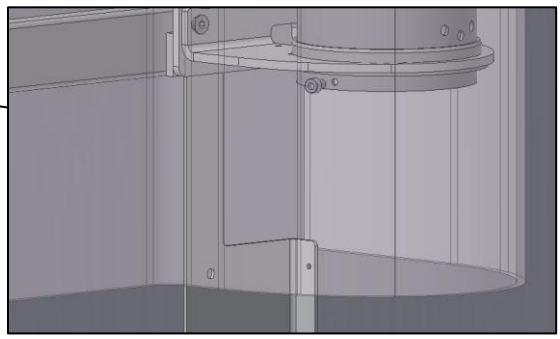

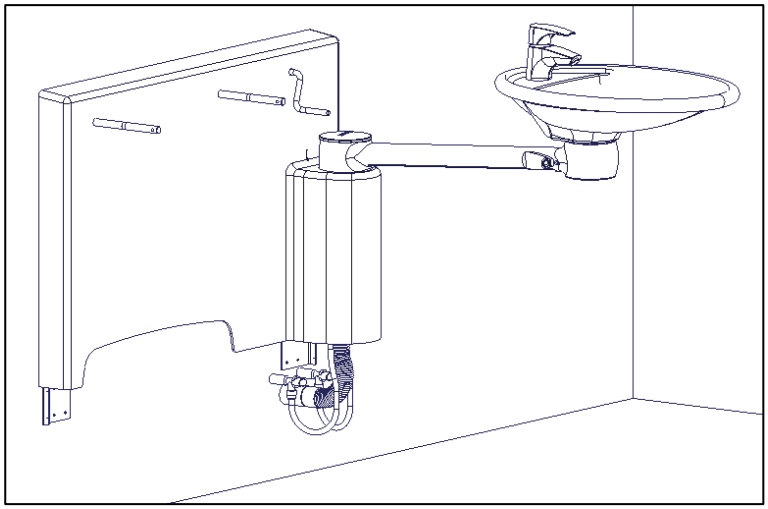

Connect drain pipe & connecting hoses.

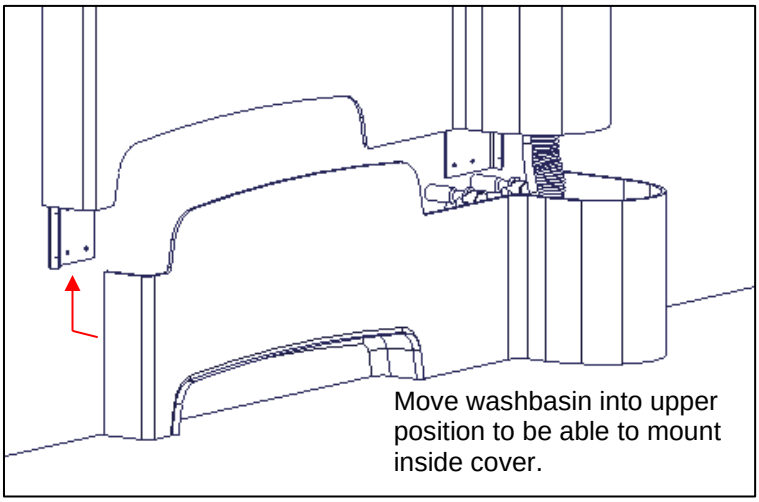

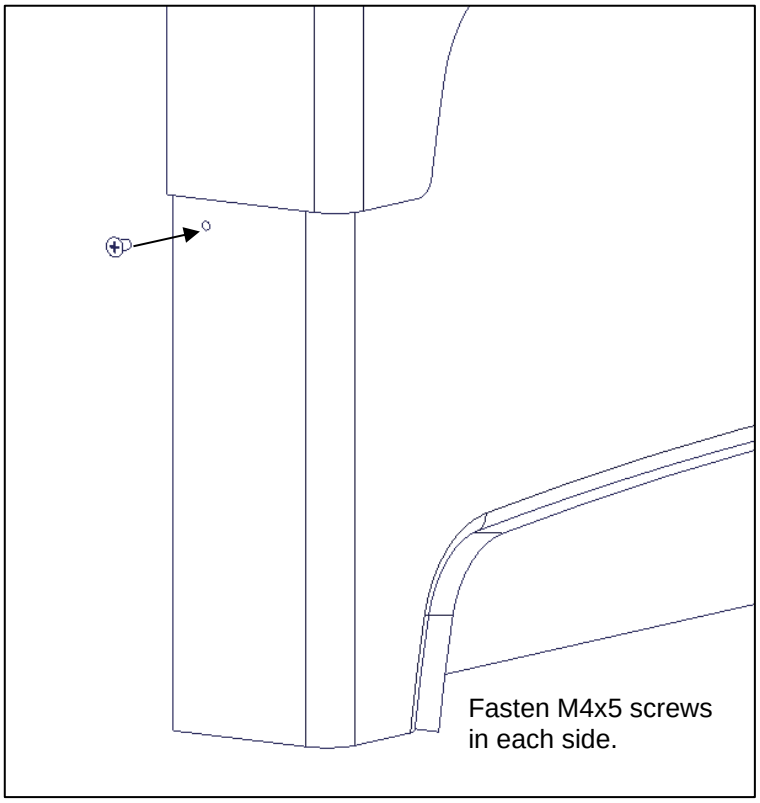

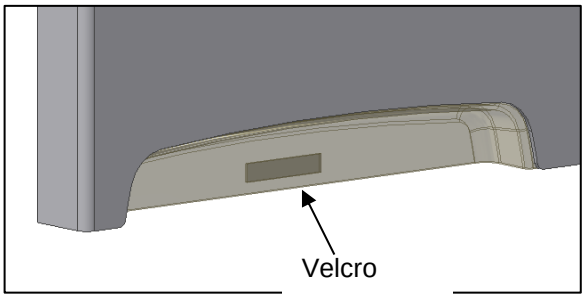

There is a small piece velcro attached to backside of inside cover. After mounting of screws, move washbasin into bottom position. Remove protection paper from velcro, hold inside cover up and position close to outer cover and push against the wall until velcro sticks to wall.

Turn washbasin in against the cover. Place if possible a spirit level onto washbasin. For fitting of fixation of Dock-in to be fastened in correct height loosen fittings a little & adjust them to leave approx. 33mm between fittings & spirit level. Afterwards fasten fittings thoroughly with a spanner.

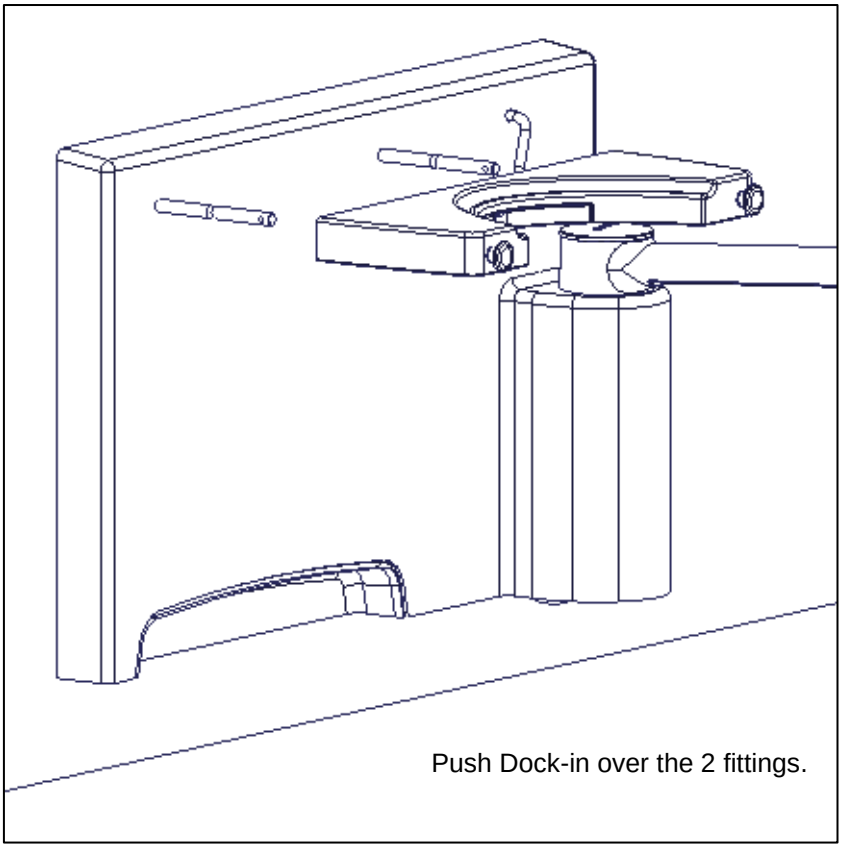

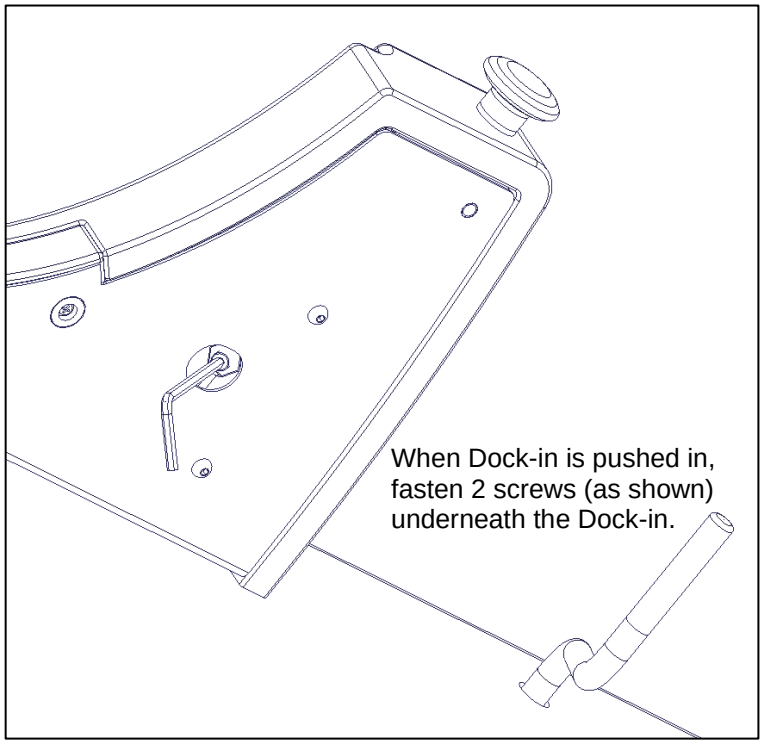

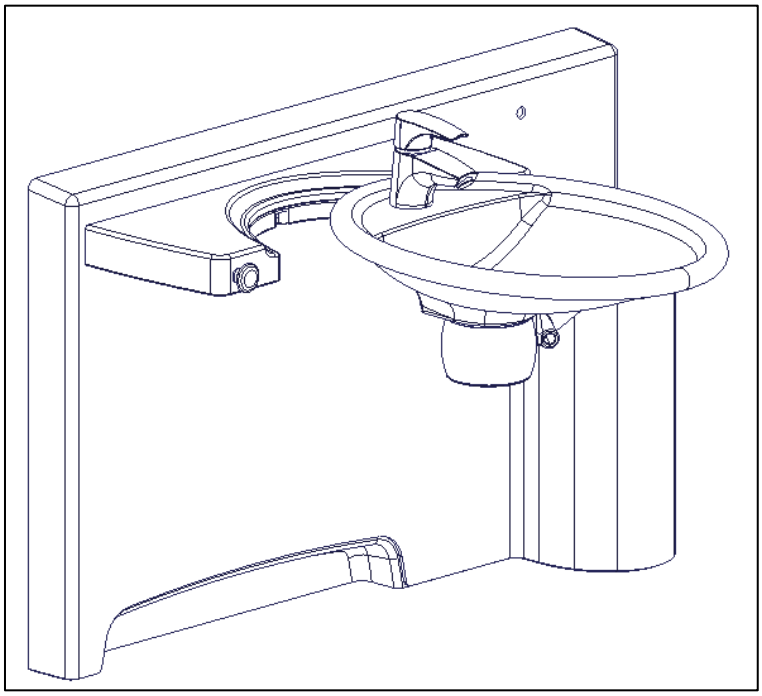

Test that washbasin freely can be swung into Dock-in and locks like it should. If washbasin is not positioned satisfactory fittings of Dock-in have to be loosened & either raised or lowered a little.

NOTE

If the washbasin is delivered with a hands free mixer tab, this might need to be calibrated to accommodate the specific light settings in the room as well as any individual user needs. The calibration has to be done according to the user manual of the mixer tab which is supplied with the washbasin.

4.8 Interfaces

Construction
The wall must be made of a material suited for screw mounting and approved for damp rooms.
The hatched area is the minimum area for reinforcement of the wall.
Reinforcement from floor to ceiling is advisable.
According to DS/ISO 17966:2016, the maximum user weight has been fixed at 245kg (539 lbs) when the washbasin is in the Dock-in and 80kg (176 lbs) when washbasin is out of the Dock-in.

Max. tensile load of upper screws
120kg/screw (264lbs/screw)

The washbasin is supplied with a set of 10 screws and rawlplugs suitable for mounting on a concrete wall. The fitter should always consider the material, condition and strength of the wall and use screws and rawlplugs suitable for the specific wall type.

Plumbing
The drain hose is a flexible Ø32 (1 ¼”) hose.
The water supply ends in 2 (two) 90° shut-off valves with ½” or 3/8” outside thread pointing downward (not included).
The flexible water connection hoses from the washbasin end in Ø10 pipes. Adapter fittings from these pipes to the shut-off valves are available from Ropox and as standard plumbing components.
If a higher location of the drain than the recommended positioning is required, there may be a risk of reduced draining from the washbasin.

For purchase of adapters for connection to various standard installations, see ”Connection Adapters – Swing Washbasin”.

<u>NOTE:</u>
All dimensions are based on adjustment of the washbasin from 750 - 950 mm (29 ½” – 37 2/5”) above floor level. If a change of this height-adjustment range is required, the recommended dimensions must be changed accordingly.

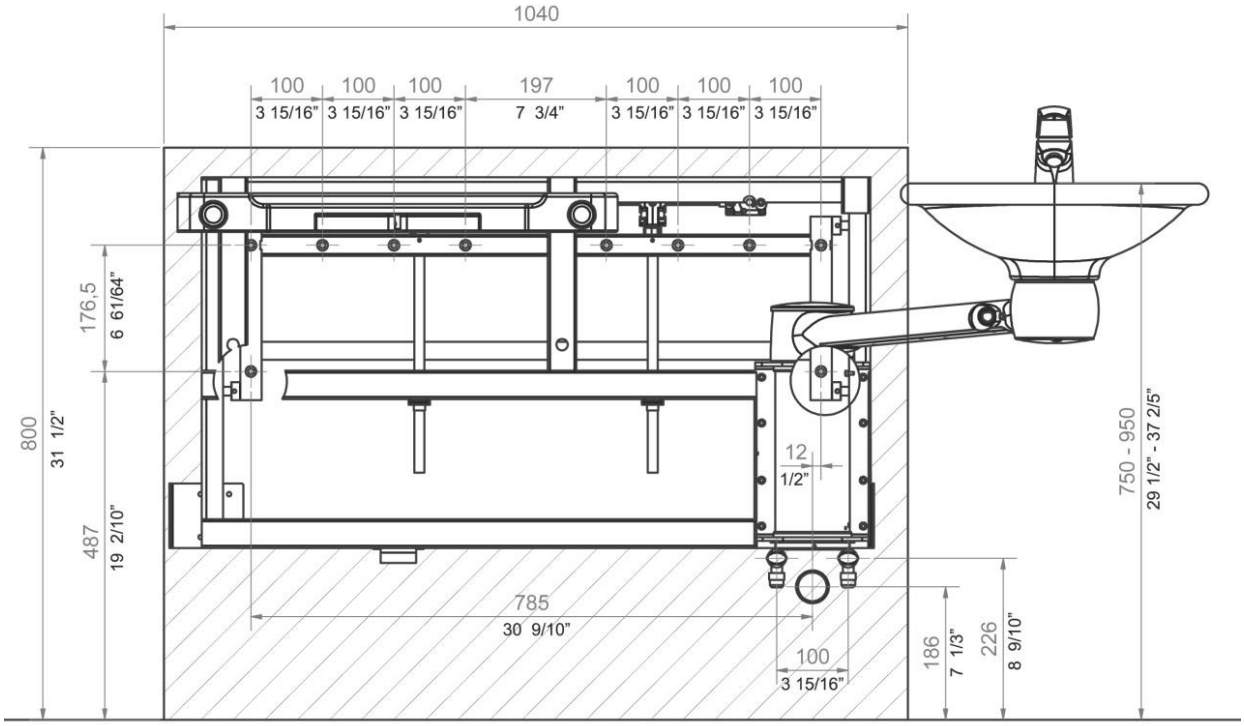

5. Safety in use

- The Ropox Swing Washbasin and Dock-in should only be used by people, who have read and understood these instructions.
- Always use the washbasin so there is no risk of damage to people or property. The person, who operates the Ropox Swing Washbasin, is responsible for avoiding damage or injury.
- Children or persons with reduced observation capability should only use the washbasin when supervised.
- If the washbasin is used in publicly accessible locations where children or people with reduced observation ability may get close to the Ropox Swing Washbasin, the person operating the washbasin must pay sufficient attention in order to prevent dangerous situations.
- Do not operate the washbasin in case of defects or damage.
- Do not overload the washbasin.
- Modifications, which may influence the operation or construction of the washbasin, are not allowed.
- Installation, service and repairs must be carried out by competent personnel.
- If the washbasin has not been assembled according to these mounting instructions the right to complain may become void.
- Only use Ropox original spare parts as replacement parts. If other spare parts are used, the right to complain may become void.
- Be aware not to swing the washbasin into the wall at great force it might damage the wash basin or wall.
- Keep notice that there is no overflow build into the washbasin. Only use Ropox' overflow plug to fill the washbasin. Overflow of water can cause slippery floor and should be avoided to minimize the risk of slipping or falling
- To avoid risk of pinching be aware not to place your hand between the washbasin and dock-in when locked in position.
- Be aware to check that the washbasin is properly locked in place in the dock-in before applying any loads
- The washbasin may only be applied to personal hygiene purposes.
- Do not lean on the accessories attached to the washbasin.
- To avoid entrapment do not place you head or body parts between the water connection hose and the swinging arm.
- Be aware that the washbasin might be slippery if covered in water and soap.

6. Cleaning/maintenance

	Note! Do not use cleaning agents containing abrasive e.g. scouring powder, steel wool, scouring sponge. This product is not designed to be sterilized, autoclaving and sterilization beyond normal cleaning is may possibly change the product safety and function.

6.1 Cleaning of the washbasin and Dock-in

It is important that the washbasin is cleaned according to these guidelines.

Clean the washbasin with a wrung cloth with lukewarm water and a mild detergent. Do not use abrasives or grinding cloths, brushes or sponges.

Ropox Swing washbasin is made of a composite material of marble and plastic granulate with a gel coat surface. This gives a hard and very hardwearing finish, which is easy to clean. Wash the surfaces daily with water and dry with a cloth. Do not use detergents containing hard abrasives – e.g. steel wool, scouring powder or sulphuric acid.

If the water has high calcium content, calcareous deposits will often occur. These deposits should be removed at least once a week by using a detergent containing citric acid, acetic acid or phosphoric acid. Leave the detergent to work for 5 to 10 minutes depending on the thickness of the deposits and clean thoroughly with a soft scouring sponge.

Disinfection of the basin may be done with household spirits.

6.2 Repair of washbasin

Minor damage or limited discolorations of the surfaces of the washbasin itself may easily be repaired by means of a special repair kit. Please contact Ropox for further details.

6.3 Maintenance

	Notification! Failing to comply with periodic maintenance may result of degrading of product function and safety. Inspections, service and repairs must be carried out by competent personnel.

The washbasin is maintenance-free and the moving parts have been lubricated for life. For reasons of safety and reliability we recommend inspection of the washbasin once a year:

- Check that all bolts have been securely tightened.
- Check that the washbasin rotates freely and that the arm swings properly

After each inspection, fill in the service schedule.

Only use Ropox original spare parts for replacement of parts. If other spare parts are used, the right to complain may become void.

7. Components part list

	Notefication! Ropox will make parts list available for extraordinary maintenance and repair beyond what is described in this manual. Repair beyond what is described in this manual may only be done by Ropox designated service personnel.

8. Environmental protection

The product is not intended to be disposed as municipal waste. Proper disassembly, sorting and disposal of components must be done by waste disposal professionals.

Part	Disposal recommendation
Wash basin	Ceramic
Main unit	Steel
Faucet	Steel
Cover	Aluminum

9. Accident reporting

The manufacturer of this product recommends any accident with this product that meets all of the following criteria reported to the appropriate authority as well as to the manufacturer.

1. There has been or could have been an event
2. The medical device is considered to be a contributing factor to the case, and
3. The event resulted or could have resulted in one of the following outcomes:

- *death - a patient, a user or a third party death*
- *A serious deterioration of a patient's health, a user's or third party health status in the form of:*
    - *1. Life-threatening disease*
    - *2. Lasting damage or injury*
    - *3. Necessary medical or surgical treatment to divert life-threatening illness, permanent injury*
    - *4. fatal death, fetal injury or congenital abnormalities.*